LONG SEAMS

COURSE	ORIENTATION	ORIENTATION
1(TOP)	115°	295°
2	120°	300°
3	115°	295°
4	120°	300°
5	115°	295°
6	120°	300°
7	115°	295°
8	120°	300°

SEE SHEET #4 FOR CLIP DETAILS.

NOTE 9: RADIOGRAPHY: SPOT X-RAY OF C/S BETWEEN SHELL COURSE 4 & 5 AT N10A PER CODE.

NOTE 10: HYDRO: FULL OF WATER FOR SHELL HEIGHT + 500mmAq

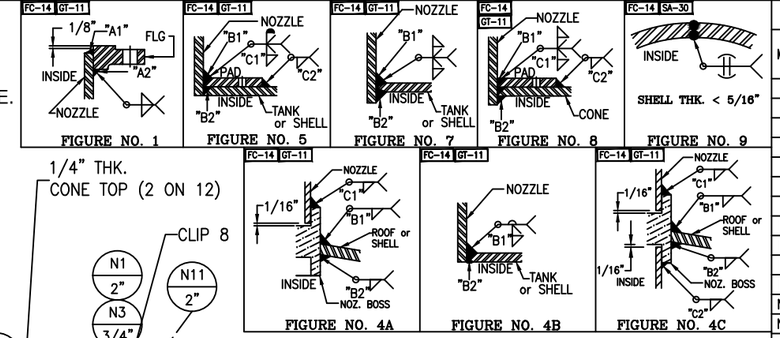

*VERT – TOP TO BOTTOM
Ship loose items:
SEE SHEET#2

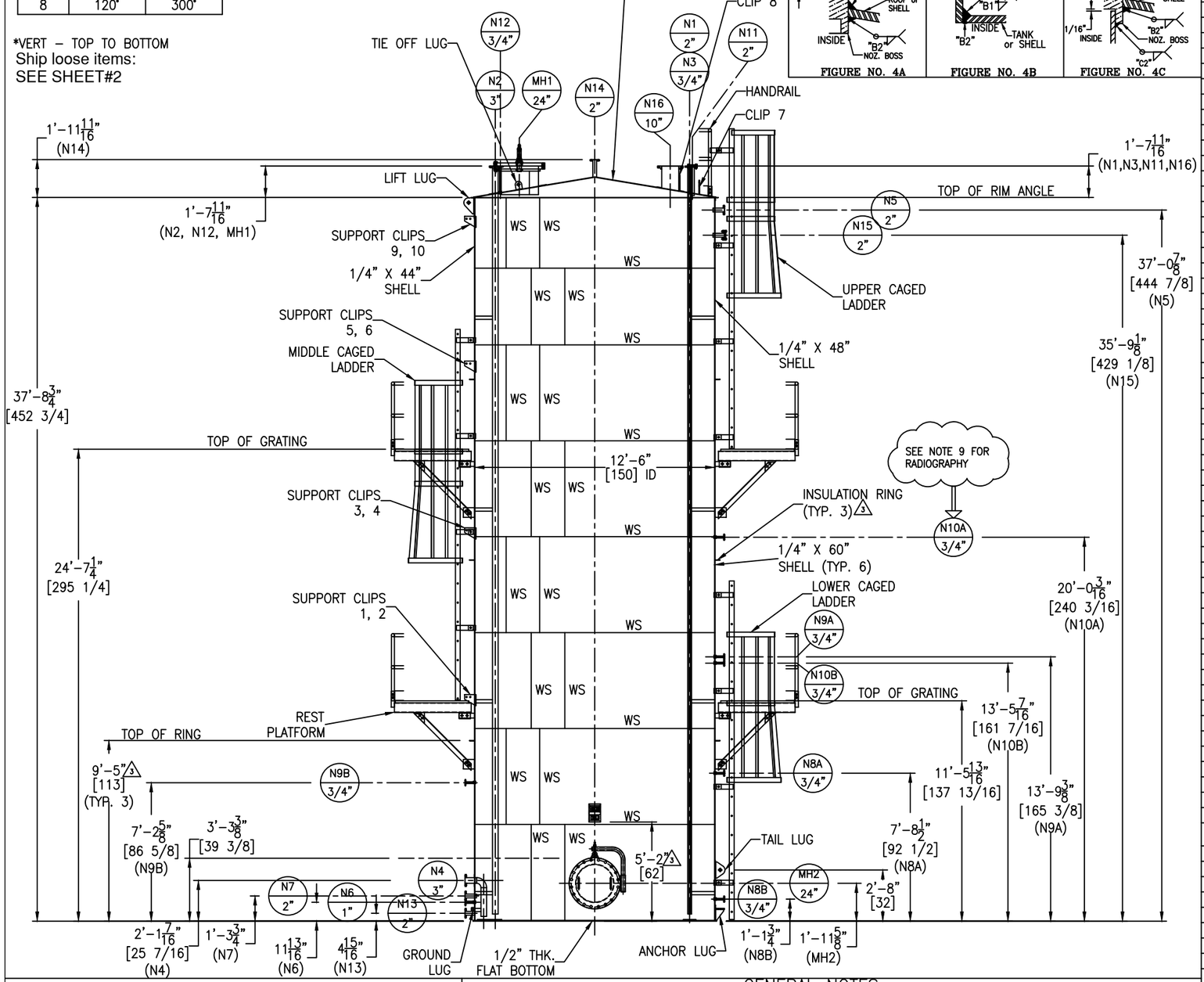

NOZZLE SCHEDULE

MARK	SERVICE	SIZE	RATING	TYPE / STYLE	NECK SCHED.	PROJECTION EXT. (E)	PROJECTION INT. (MIN.)	WELD FIGURE	REPAD SIZE (WIDTH X THK.)	WELD SIZE "A1"	"A2"	"B1"	"B2"	"C1"	"C2"
N1	LIQUID INLET	2"	150#	RFSO	80S	SEE DWG	SEE DWG	1,7	–	3/16	3/16	1/4	1/8	–	–
N2	LIQUID INLET	3"	150#	RFSO	40S	SEE DWG	SEE DWG	1,8	2" X 1/4"	3/16	3/16	1/4	1/8	1/4	1/4
N3	LIQUID INLET	3/4"	150#	RFSO W/BOSS	80S	SEE DWG	SEE DWG	1,4C	–	1/8	1/8	1/4	1/8	3/16	3/16
N4	LIQUID OUTLET	3"	150#	RFSO W/ELBOW	40S	6"	SEE DWG	1,8	2" X 3/16"	3/16	3/16	1/4	1/4	3/16	3/16
N5	LA	2"	150#	RFSO	80S	6"	1"	1,7	–	3/16	3/16	1/4	1/8	–	–
N6	TG	1"	150#	RFSO W/BOSS	80S	6"	–	1,4A	–	3/16	3/16	1/4	1/8	3/16	–
N7	LI	2"	150#	RFSO	80S	6"	1"	1,7	–	3/16	3/16	1/4	1/8	–	–
N8A	LG1	3/4"	150#	RFSO W/BOSS	80S	6"	–	1,4A	–	1/8	1/8	1/4	1/8	3/16	–
N8B	LG1	3/4"	150#	RFSO W/BOSS	80S	6"	–	1,4A	–	1/8	1/8	1/4	1/8	3/16	–
N9A	LG2	3/4"	150#	RFSO W/BOSS	80S	6"	–	1,4A	–	1/8	1/8	1/4	1/8	3/16	–
N9B	LG2	3/4"	150#	RFSO W/BOSS	80S	6"	–	1,4A	–	1/8	1/8	1/4	1/8	3/16	–
N10A	LG3	3/4"	150#	RFSO W/BOSS	80S	6"	–	1,4A	–	1/8	1/8	1/4	1/8	3/16	–
N10B	LG3	3/4"	150#	RFSO W/BOSS	80S	6"	–	1,4A	–	1/8	1/8	1/4	1/8	3/16	–
N11	SPARE	2"	150#	RFSO W/BLIND	80S	SEE DWG	1"	1,7	–	3/16	3/16	1/4	1/8	–	–
N12	NI INLET	3/4"	150#	RFSO W/BOSS	80S	SEE DWG	–	1,4A	–	1/8	1/8	1/4	1/8	3/16	–
N13	DRAIN	2"	150#	RFSO	80S	6"	–	1,4B	–	3/16	3/16	1/4	1/8	–	–
N14	VENT	2"	150#	RFSO	80S	SEE DWG	–	1,4B	–	3/16	3/16	1/4	1/8	–	–
N15	SPARE	2"	150#	RFSO W/BLIND	80S	6"	1"	1,7	–	3/16	3/16	1/4	1/8	–	–
MH1	ROOF MANWAY	24"	150#	RFSO W/DAVIT	1/4"	SEE DWG	1"	1,8	5" X 1/4"	1/4	1/4	1/4	1/8	1/4	3/16
MH2	SHELL MANWAY	24"	150#	RFSO W/DAVIT	1/4"	8"	1"	1,8	4" X 3/16"	1/4	1/4	3/16	3/16	3/16	3/16
N16	EMERGENCY VENT	10"	150#	RFSO	40S	SEE DWG	–	1,5	2" X 1/4"	3/8	3/8	1/4	1/8	1/4	3/16

MATERIALS OF CONSTRUCTION

	VESSEL
SHELL	SA240-304/304L
TOP CONE/FLAT BOTTOM	SA240-304/304L
RIM ANGLE	SA479-304/304L
NOZZLE NECKS	SA312-304/304L WLD & SA403-304/304L WPW
NOZZLE FLANGES	SA182F-304/304L
MANWAY NECKS	SA240-304/304L
MANWAY FLANGES	SA182F-304/304L
GASKETS	GYLON PTFE (RG-TFE-G3510)
NOZZLE BOLTS/STUDS	SA193-B8
NOZZLE NUTS	SA194-8
STRUCTURAL BOLTS	SA193-B7 (ZINC PLATED)
NUTS	SA194-2H (ZINC PLATED)
REPADS	SA240-304/304L
NOZZLE BOSS	SA182F-304/304L (3000#)
SUPPORTS/HOLD DOWNS	SA240-304/304L
LIFTING LUGS	SA240-304/304L
VACUUM RINGS	–
INSULATION RINGS	3 SA240-304/304L
GROUND LUG	SA240-304/304L
BAFFLE	–
LADDER	SA36
TANK CLIPS (LADDER)	SA240-304/304L
HANDRAIL	SA500
HANDRAIL POST CLIPS	SA479-304/304L
PLATFORM	SA36
PLATFORM CLIPS	SA36
DIPTUBE SUPPORT	SA240-304/304L
JACKET NOZZLE NECKS	–
JACKET NOZZLE FLANGES	–

DESIGN DATA

	VESSEL
DESIGN AND FAB. CODE	API650
CERT. STAMP REQ'D.	NO
DESIGN PRESSURE	FULL WATER + 500MMAq & -50MMAq
DESIGN TEMPERATURE	140° F
MIN. DESIGN METAL TEMP.	-20° F @ FULL WATER + 500MMAq
OPERATING PRESSURE	ATM
OPERATING TEMPERATURE	113° F
JOINT EFFICIENCY HEADS	0.70
JOINT EFFICIENCY SHELL	0.70
CORROSION ALLOWANCE	0"
SPECIFIC GRAVITY	1.010
EARTHQUAKE ZONE	Ss = (0.104) S1 = (0.046)
WIND LOAD	115 MPH
STRESS RELIEF	NOT REQ'D
RADIOGRAPHIC EXAM	SEE NOTE 9
DYE PENETRANT EXAM	SEE NOTE 7
MAGNETIC PARTICLE EXAM	NOT REQ'D
HYDROSTATIC TEST	SEE NOTE 10
PNEUMATIC TEST	–
JKT DESIGN AND FAB. CODE	–
JKT CERT. STAMP REQ'D.	–
JKT DESIGN PRESSURE	–
JKT DESIGN TEMPERATURE	–
JKT MIN. DESIGN METAL TEMP.	–
JKT OPERATING PRESSURE	–
JKT OPERATING TEMPERATURE	–
JKT JOINT EFFICIENCY HEADS	–
JKT JOINT EFFICIENCY SHELL	–
JKT HYDRO TEST	–

VESSEL FINISH

INTERIOR WELD TREATMENT:	SAV TANK STANDARD
EXTERIOR WELD TREATMENT:	SAV TANK STANDARD
SAV TANK FINISHING STANDARD:	SEE NOTE 6
INSULATION:	N/A
PAINTING/GALVANIZING:	SEE NOTE 8

VESSEL CAPACITY AND WEIGHTS

OPERATING CAPACITY	–
FULL CAPACITY	34,900 GAL.
EMPTY SHIPPING WEIGHT WITHOUT ACCESSORIES	3 24,700 LBS.
WEIGHT FULL OF WATER	3 319,900 LBS.
WEIGHT FULL OF PRODUCT	3 322,800 LBS.
WEIGHT OF ACCESSORIES	4,010 LBS.

QUALITY CONTROL

ENG. _____ DATE: _____

Q.C. _____ DATE: _____

This drawing is issued for customer approval. please review, make approval changes (if any) in red. check the appropriate box, sign & date.

- ☐ Approval – no changes. Please proceed with fabrication.
- ☐ Approved as noted. Please proceed with fabrication
- ☐ Not approved. Please make changes and resubmit.

Customer signature _____ Date _____

GENERAL NOTES

1.) COVER ALL FLANGES, OPENINGS & MACHINED SURFACES PRIOR TO SHIPMENT UNLESS OTHERWISE NOTED.
2.) BOLT HOLES TO STRADDLE 0° & 180° UNLESS OTHERWISE NOTED.
3.) NOZZLE REPADS TO HAVE (1) ø1/4" NPT TELL-TALE HOLES ON HORIZONTAL CENTER LINE. ALL OTHER REPADS TO HAVE (1) ø1/4" WEEP HOLE AT LOWEST POINT ON PAD.
4.) MANUFACTURING TOLERANCE TO BE IN ACCORDANCE WITH API STANDARD 650 7.5.
5.) ASME MATERIALS TO CONFORM TO THE FOLLOWING: FLANGES – B16.5, FITTINGS – B16.9 & COUPLINGS/BOSS – B16.11.
6.) PICKLE ALL EXTERIOR WELDS. PASSIVATE INTERIOR & EXTERIOR OF VESSEL.
7.) DYE PEN – SHELL TO BOTTOM SEAM & ALL SHELL NOZZLES.
8.) PAINTING/GALVANIZING – HANDRAILS, LADDERS, TO BE PAINTED (1) COAT SAFETY YELLOW (5-7 MILS). PLATFORM, BRACES & GRATING TO BE HOT DIPPED GALVANIZED.
9.) RADIOGRAPHY: SPOT X-RAY OF C/S BETWEEN SHELL COURSE 4 & 5 AT N10A PER CODE. 1
10.) HYDRO: FULL OF WATER FOR SHELL HEIGHT + 500mmAq

REVISIONS

REV	D.BY	C.BY	DATE	DESCRIPTION
				AS BUILT
3	RS	AD	11/14/24	CERTIFIED
2	AD	RS	11/4/24	APPROVAL REV 2
1	RS	AD	10/21/24	APPROVAL REV 1
0	RS	AD	9/3/24	APPROVAL

Savannah Tank & Equipment Corp.
1517 Telfair Road, Savannah, GA 31415
(912) 233-8902

DRAWN BY: RS
CHK'D BY: AD
APPROVED BY: NP
SCALE: 1/4" = 1'-0"

SYMS ENGINEERING
NMP STORAGE TANK
EQUIP. #TK-F502
CUST. PO #MCD010813KE01

DRAWING NO.: 048-24-1 SHT 1 OF 14 REV. SET 3

LONG SEAMS

COURSE	ORIENTATION	ORIENTATION
1(TOP)	115°	295°
2	120°	300°
3	115°	295°
4	120°	300°
5	115°	295°
6	120°	300°
7	115°	295°
8	120°	300°

*VERT – TOP TO BOTTOM

Ship loose items:
(3 pcs.) Swing gate (A71-24PC)
(3 pcs.) Caged ladders (Anti-slip rungs) w/ hardware
(2 pcs.) Top handrails w/ hardware
(1+1 pcs.) Rest platform w/ (4+4) Brace angles and hardware
(2+2 pcs.) Rest platform handrail w/ hardware
(2 sets) Spare bolts, nuts & gaskets
for N11, N15, MH1 & MH2

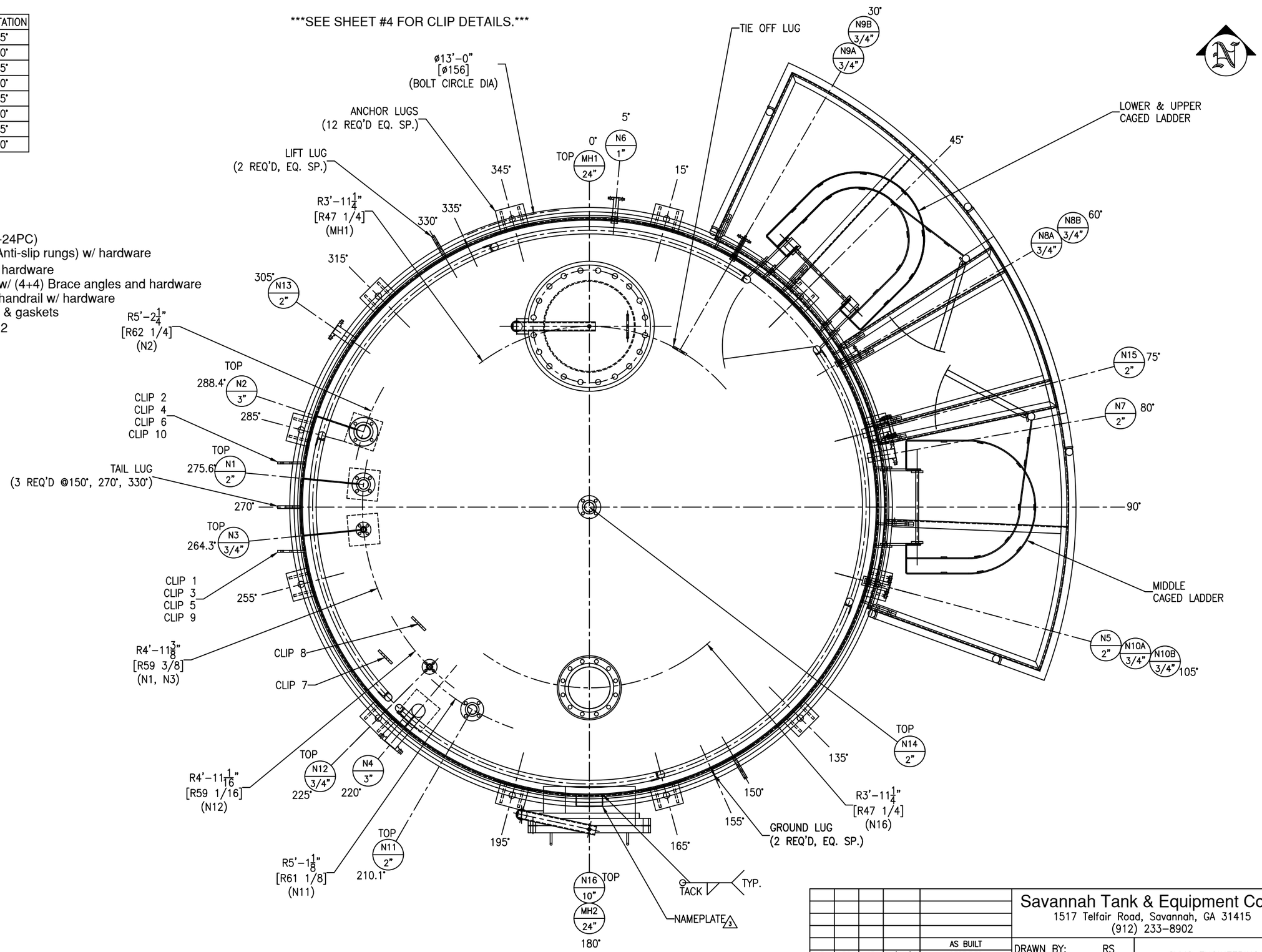

REV	D.BY	C.BY	DATE	DESCRIPTION
				AS BUILT
3	RS	AD	11/14/24	CERTIFIED
2	AD	RS	11/4/24	APPROVAL REV 2
1	RS	AD	10/21/24	APPROVAL REV 1
0	RS	AD	9/3/24	APPROVAL

1 REVISIONS

Savannah Tank & Equipment Corp.
1517 Telfair Road, Savannah, GA 31415
(912) 233-8902

DRAWN BY: RS
CHK'D BY: AD
APPROVED BY: NP
SCALE: 3/4" = 1'-0"

SYMS ENGINEERING
NMP STORAGE TANK
EQUIP. #TK-F502
CUST. PO #MCD010813KE01

DRAWING NO.: 048-24-2 SHT 2 OF 14 REV. SET 3

FC-14

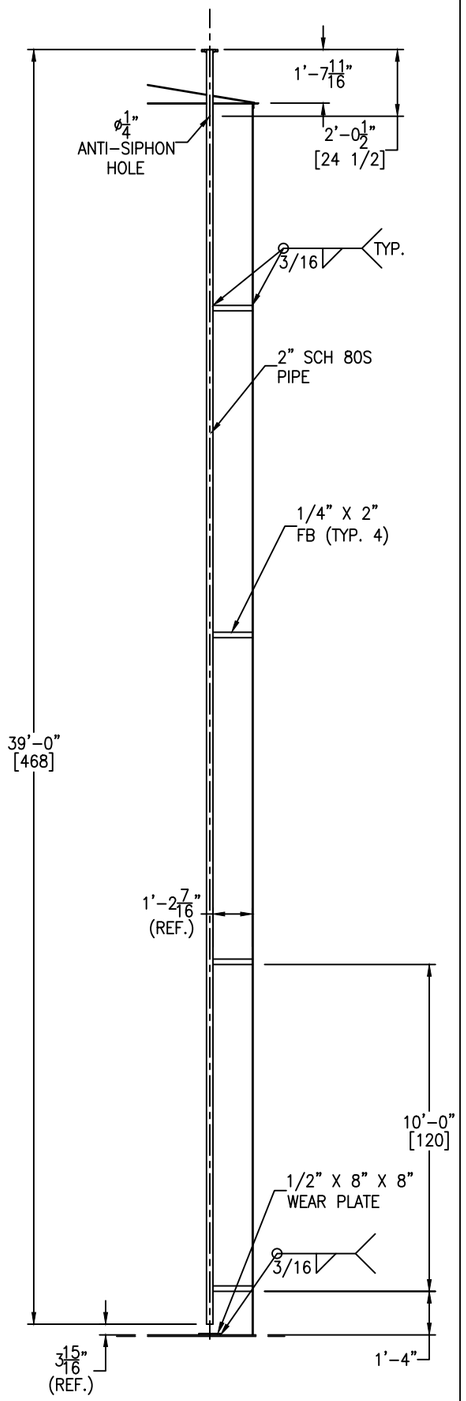

NOZZLE N1 DETAIL

SCALE: 1/3" = 1'-0"

FC-14

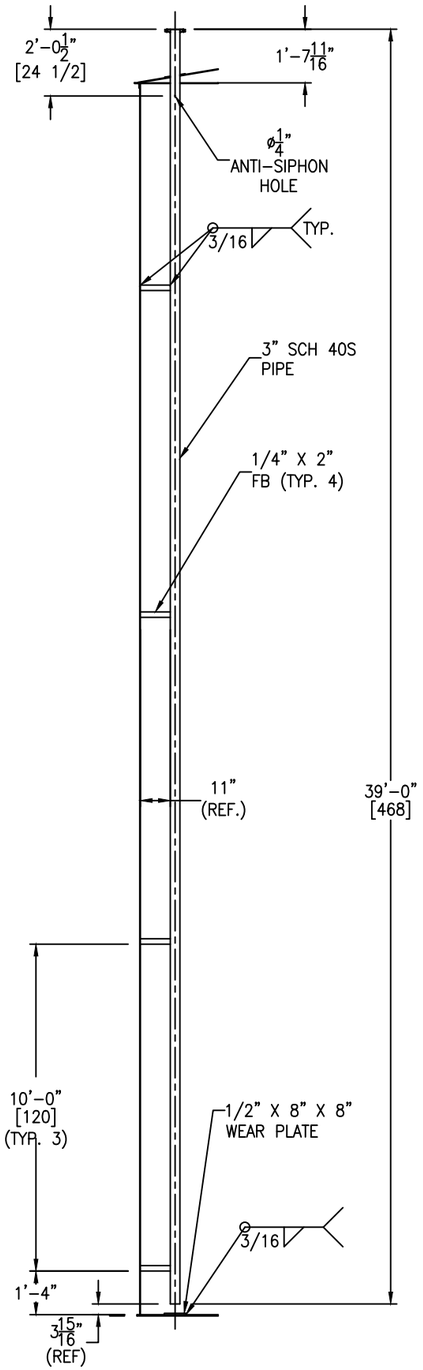

NOZZLE N2 DETAIL

SCALE: 1/3" = 1'-0"

FC-14

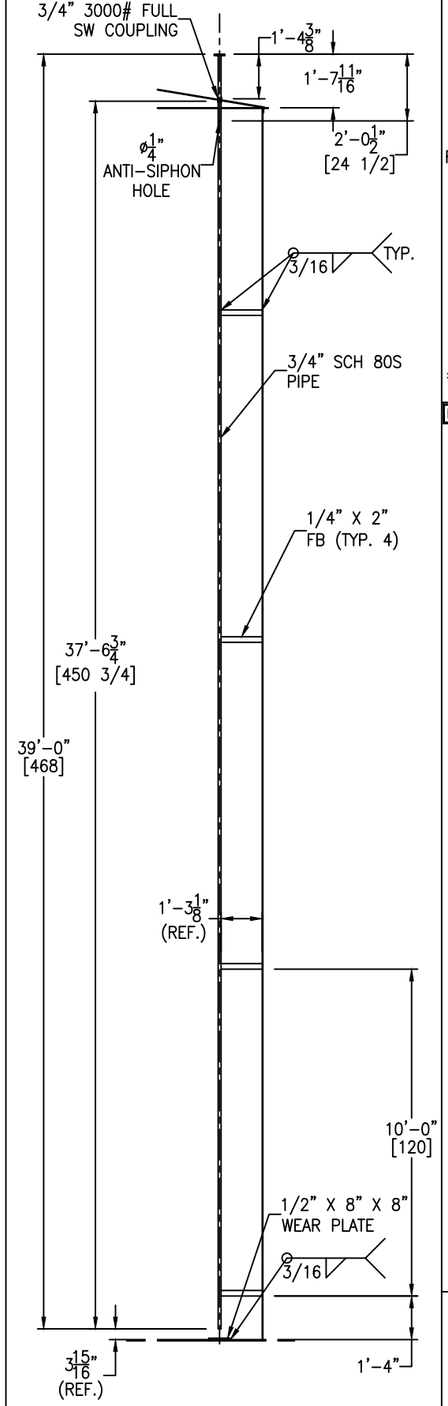

NOZZLE N3 DETAIL

SCALE: 1/2" = 1'-0"

FC-14

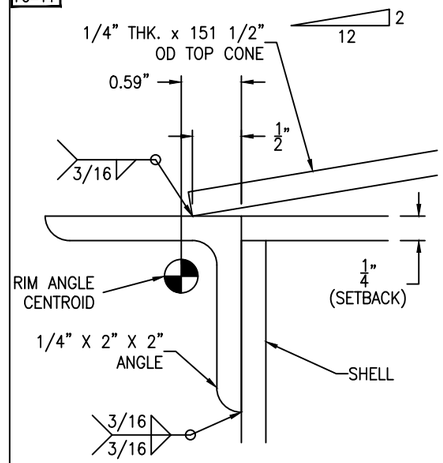

CONICAL ROOF DETAIL

SCALE: 1'-0" = 1'-0"

FC-14

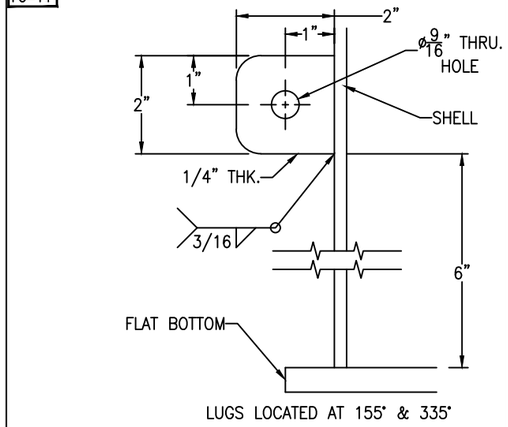

GROUND LUG DETAIL

(2 REQ'D) SCALE: 6" = 1'-0"

FC-14

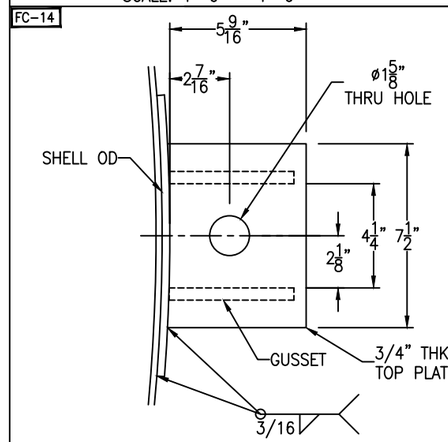

FC-14

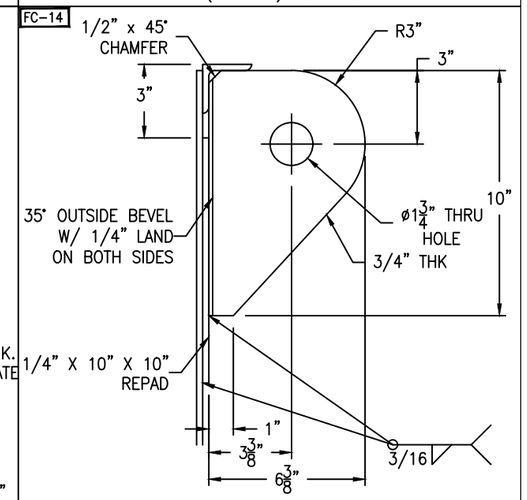

TANK WT. <= 30000#

SHACKLE PIN DIA. = 1 5/8"

ANGLE LIFT LUG DETAIL

(2 REQ'D) SCALE: 3" = 1'-0"

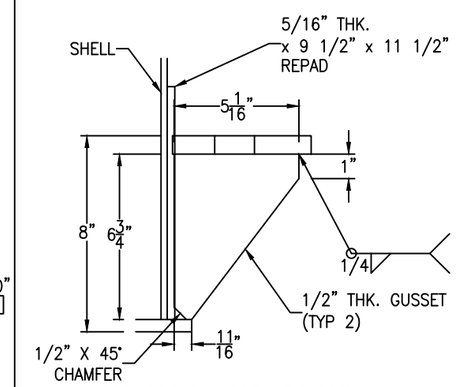

ANCHOR LUG DETAIL

(12 REQ'D) SCALE: 3" = 1'-0"

FC-14

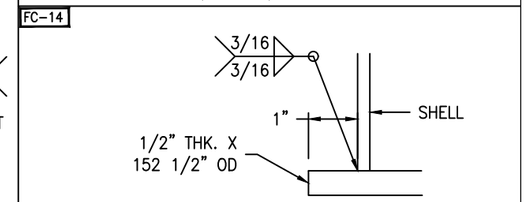

BOTTOM DETAIL

SCALE: 6" = 1'-0"

REV	D.BY	C.BY	DATE	DESCRIPTION
				AS BUILT
3	RS	AD	11/14/24	CERTIFIED
2	AD	RS	11/4/24	APPROVAL REV 2
1	RS	AD	10/21/24	APPROVAL REV 1
0	RS	AD	9/3/24	APPROVAL

⚠ REVISIONS

Savannah Tank & Equipment Corp.
1517 Telfair Road, Savannah, GA 31415
(912) 233-8902

DRAWN BY: RS
CHK'D BY: AD
APPROVED BY: NP
SCALE: 1/4" = 1'-0"

SYMS ENGINEERING
NMP STORAGE TANK
EQUIP. #TK-F502
CUST. PO #MCD010813KE01

DRAWING NO.: 048-24-3 SHT 3 OF 14 | REV. SET 3

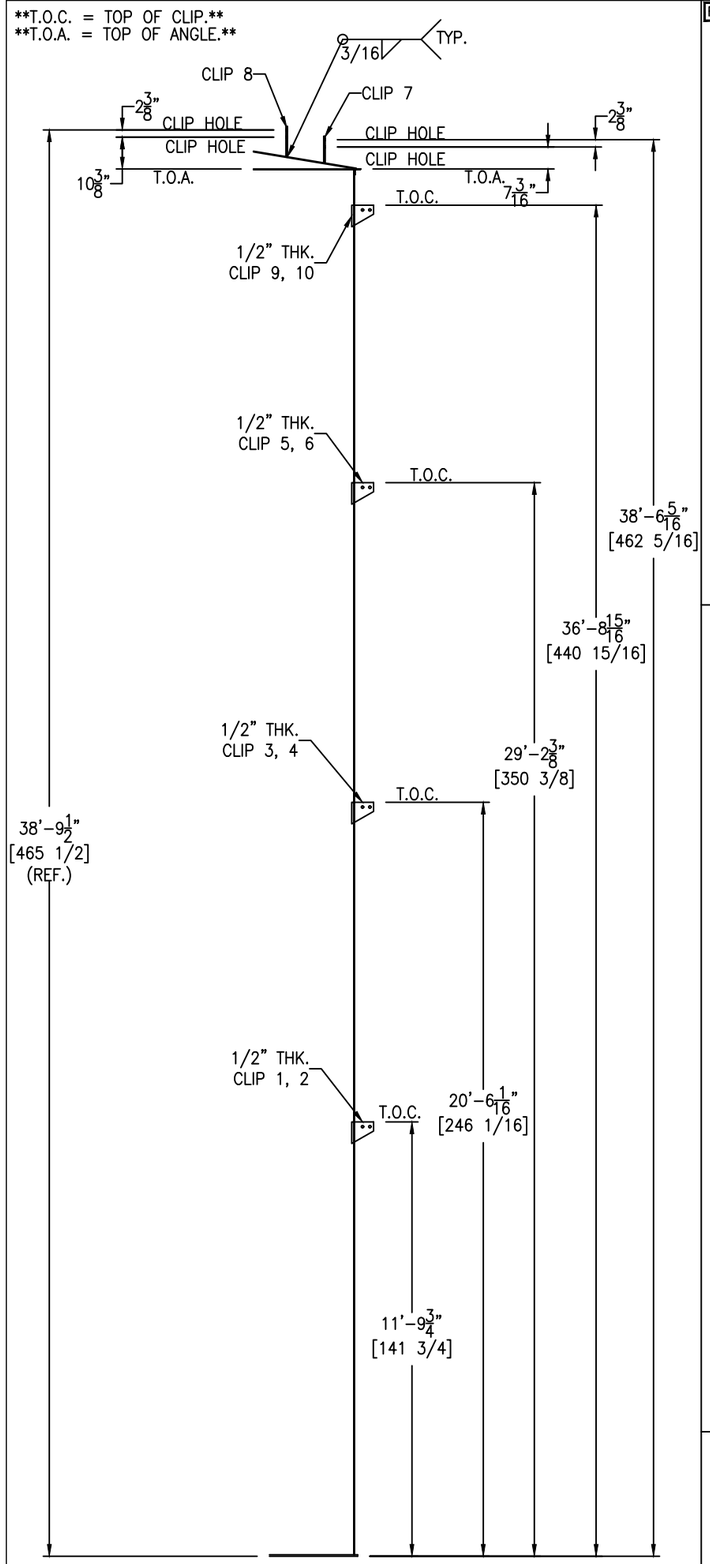

CLIPS DETAIL (ELEVATION)

SCALE: 3/8" = 1'-0"

FC-14

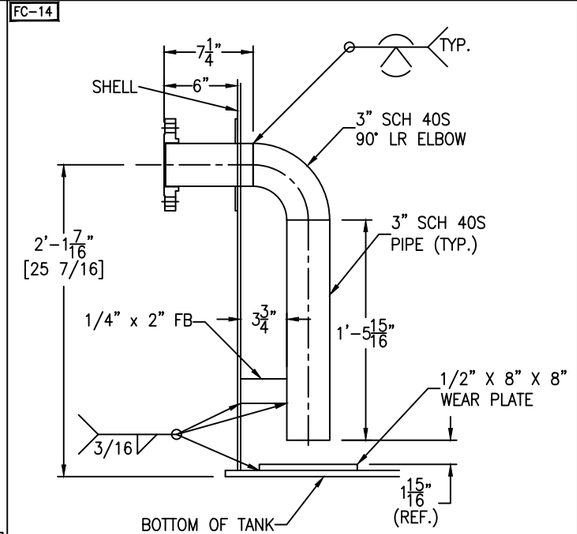

NOZZLE N4 DETAIL

SCALE: 1 1/2" = 1'-0"

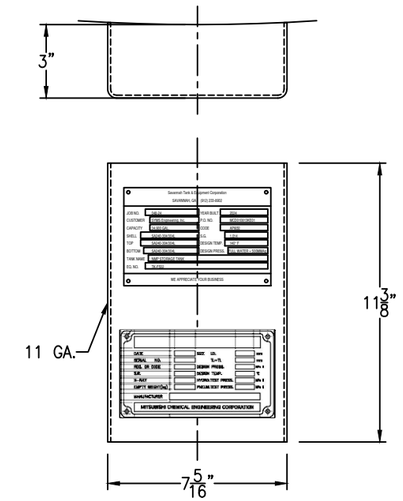

NAME PLATE BRACKET DETAIL

(1 REQ'D) SCALE: 3" = 1'-0"

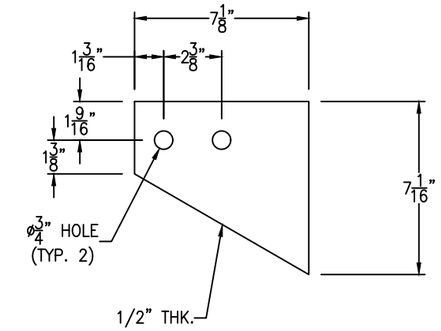

SHELL CLIPS DETAIL

(8 REQ'D) SCALE: 1 1/2" = 1'-0"

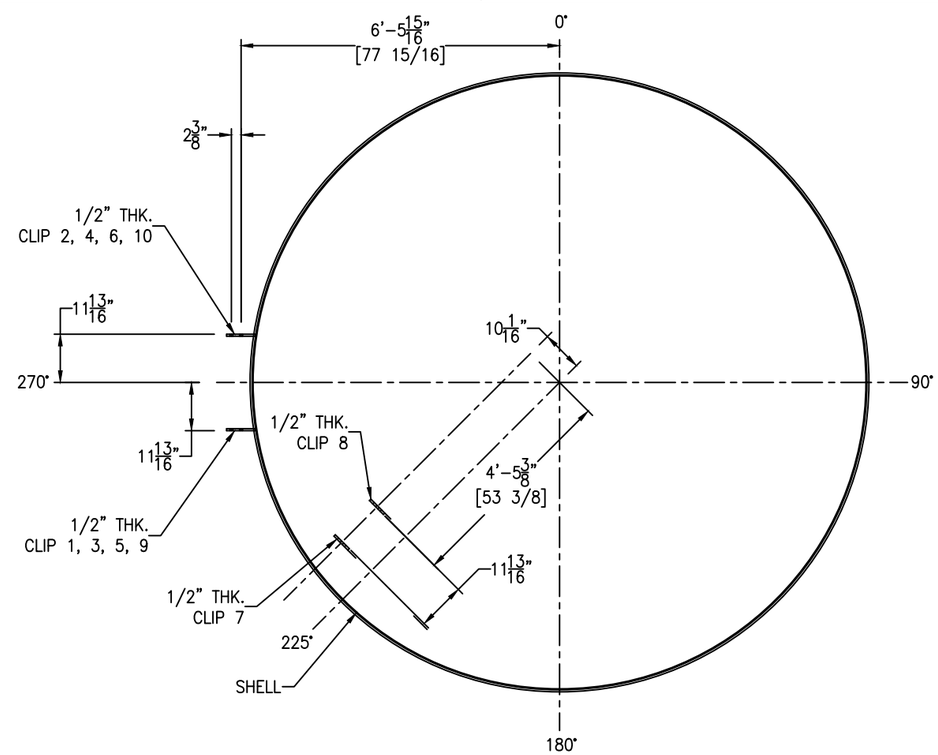

CLIPS DETAIL (ORIENTATION)

SCALE: 1/2" = 1'-0"

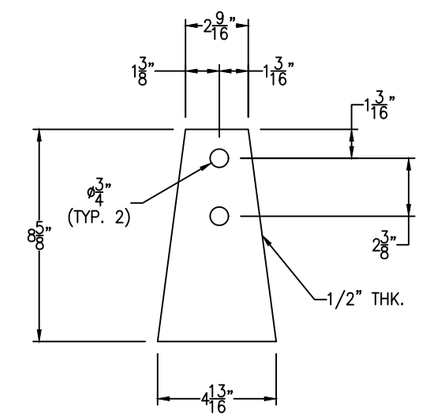

*ADJUST HEIGHT OF CLIPS DURING FABRICATION.

ROOF CLIPS DETAIL

(2 REQ'D) SCALE: 3" = 1'-0"

Bolting for blinds

N11: (4+4+4) 5/8"-11 NC x 2 1/2" HH BOLT
(4+4+4) 5/8"-11 NC HH NUT
(1+1+1) 2" 150# RING GASKET x 1/8"
(GYLON PTFE (RG-TFE-G3510))

N15: (4+4+4) 5/8"-11 NC x 2 1/2" HH BOLT
(4+4+4) 5/8"-11 NC HH NUT
(1+1+1) 2" 150# RING GASKET x 1/8"
(GYLON PTFE (RG-TFE-G3510))

REV	D.BY	C.BY	DATE	DESCRIPTION
				AS BUILT
3	RS	AD	11/14/24	CERTIFIED
2	AD	RS	11/4/24	APPROVAL REV 2
1	RS	AD	10/21/24	APPROVAL REV 1
0	RS	AD	9/3/24	APPROVAL

⚠1 REVISIONS

Savannah Tank & Equipment Corp.
1517 Telfair Road, Savannah, GA 31415
(912) 233-8902

DRAWN BY: RS
CHK'D BY: AD
APPROVED BY: NP
SCALE: 1/4" = 1'-0"

SYMS ENGINEERING
NMP STORAGE TANK
EQUIP. #TK-F502
CUST. PO #MCD010813KE01

DRAWING NO.: 048-24-4 SHT 4 OF 14 REV. SET 3

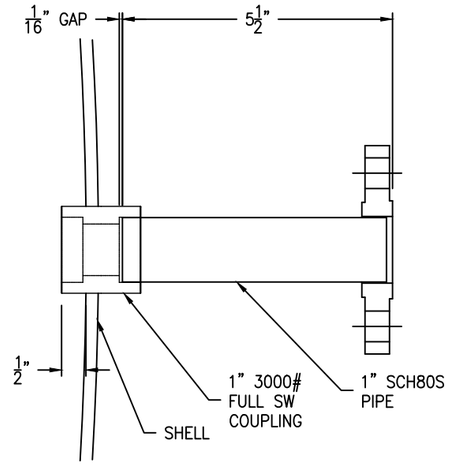

NOZZLE N6 DETAIL

SCALE: 6" = 1'-0"

FC-14

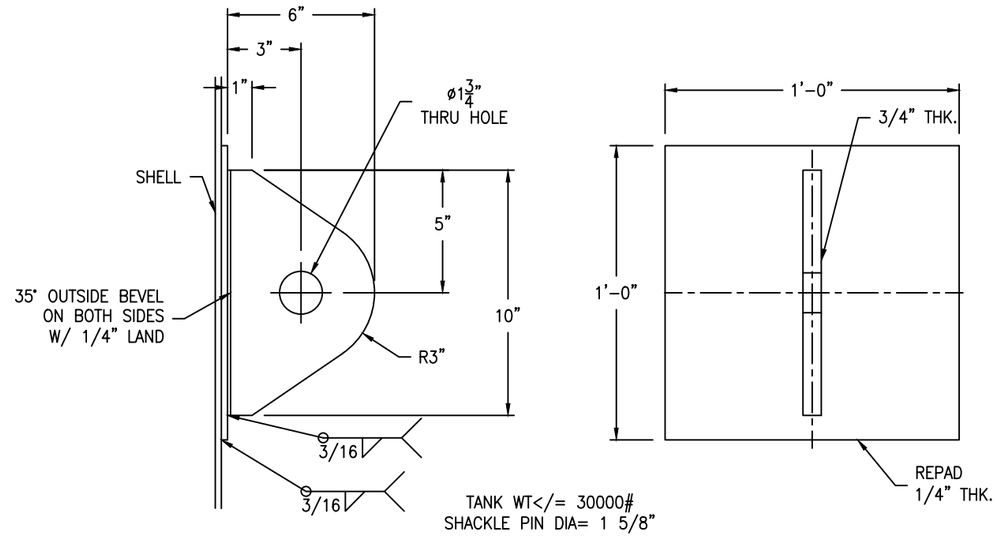

TANK WT<= 30000#
SHACKLE PIN DIA= 1 5/8"

TAIL LUG DETAIL

(3 REQ'D) SCALE: 3" = 1'-0"

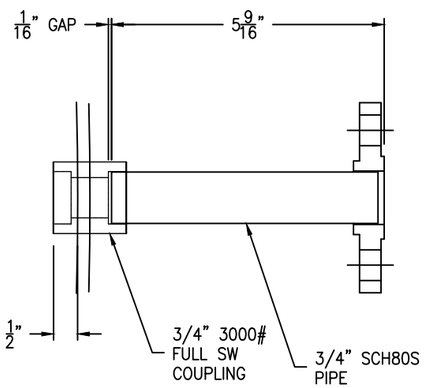

NOZZLE N8A/8B/9A/9B/10A/10B DETAIL

(6 REQ'D) SCALE: 6" = 1'-0"

FC-14

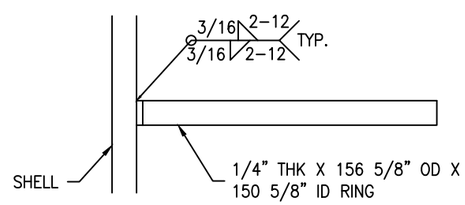

3 INSULATION RING DETAIL

(3 REQ'D) SCALE: 1'-0" = 1'-0"

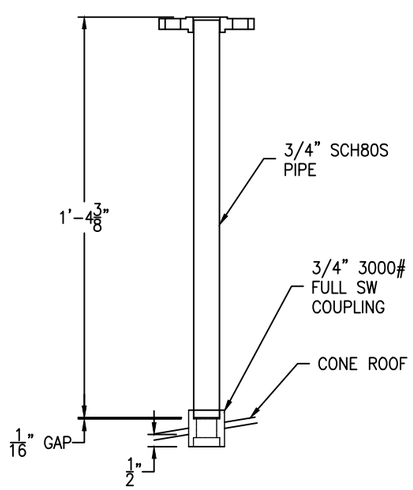

NOZZLE N12 DETAIL

SCALE: 3" = 1'-0"

REV	D.BY	C.BY	DATE	DESCRIPTION
				AS BUILT
3	RS	AD	11/14/24	CERTIFIED
2	AD	RS	11/4/24	APPROVAL REV 2
1	RS	AD	10/21/24	APPROVAL REV 1
0	RS	AD	9/3/24	APPROVAL

1 REVISIONS

Savannah Tank & Equipment Corp.
1517 Telfair Road, Savannah, GA 31415
(912) 233-8902

DRAWN BY: RS
CHK'D BY: AD
APPROVED BY: NP
SCALE: 1/4" = 1'-0"

SYMS ENGINEERING
NMP STORAGE TANK
EQUIP. #TK-F502
CUST. PO #MCD010813KE01

DRAWING NO.: 048-24-5 SHT 5 OF 14 | REV. SET 3

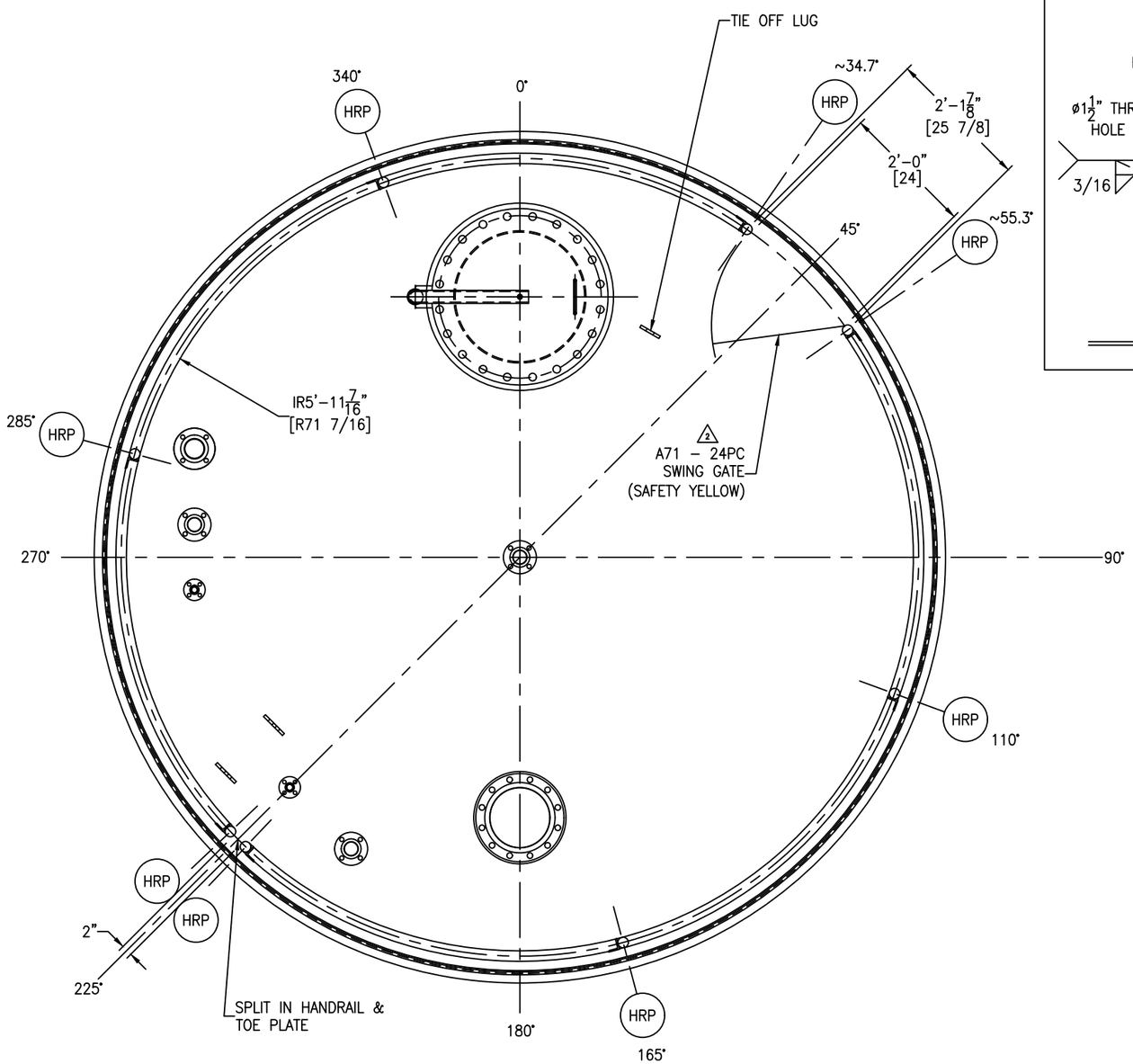

HANDRAIL DETAIL

SCALE: 3/4" = 1'-0"

FC-14

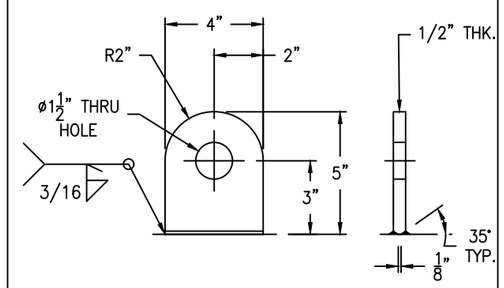

SHACKLE PIN DIA. = 3/4"

TIE OFF LUG DETAIL

SCALE: 3" = 1'-0"

FC-14

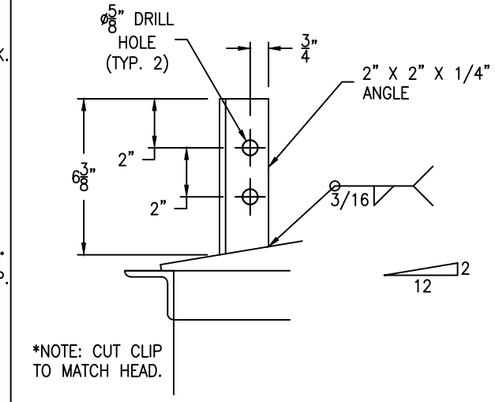

POST CLIP DETAIL

(8 REQ'D) SCALE: 3" = 1'-0"

GM-73

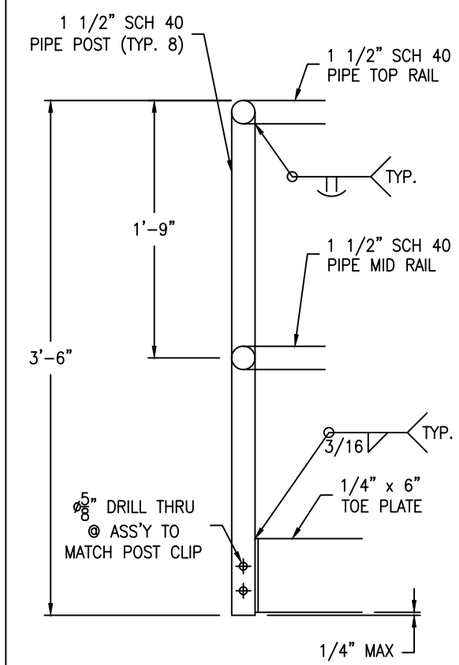

HANDRAIL DETAIL

SCALE: 1 1/2" = 1'-0"

HANDRAIL BOLTING:
(16) 1/2-13 NC X 3" HH BOLT – SA193-B7 (ZINC PLATED)
(16) 1/2-13 NC HH NUT – SA194-2H (ZINC PLATED)

HANDRAIL TO BE PAINTED SAFETY YELLOW

REV	D.BY	C.BY	DATE	DESCRIPTION
				AS BUILT
3	RS	AD	11/14/24	CERTIFIED
2	AD	RS	11/4/24	APPROVAL REV 2
1	RS	AD	10/21/24	APPROVAL REV 1
0	RS	AD	9/3/24	APPROVAL

1 REVISIONS

Savannah Tank & Equipment Corp.
1517 Telfair Road, Savannah, GA 31415
(912) 233-8902

DRAWN BY: RS
CHK'D BY: AD
APPROVED BY: NP
SCALE: 3/8" = 1'-0"

SYMS ENGINEERING
NMP STORAGE TANK
EQUIP. #TK-F502
CUST. PO #MCD010813KE01

DRAWING NO.: 048-24-6 SHT 6 OF 14 | REV. SET 3

LADDER CLIP BOLTING:
(8) 5/8-11 NC X 2" HH BOLT - SA193-B7 (ZINC PLATED)
(8) 5/8-11 NC HH NUT - SA194-2H (ZINC PLATED)

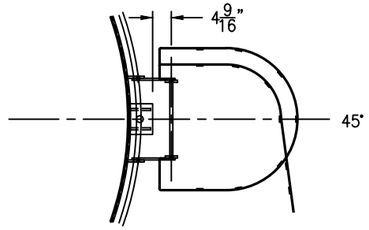

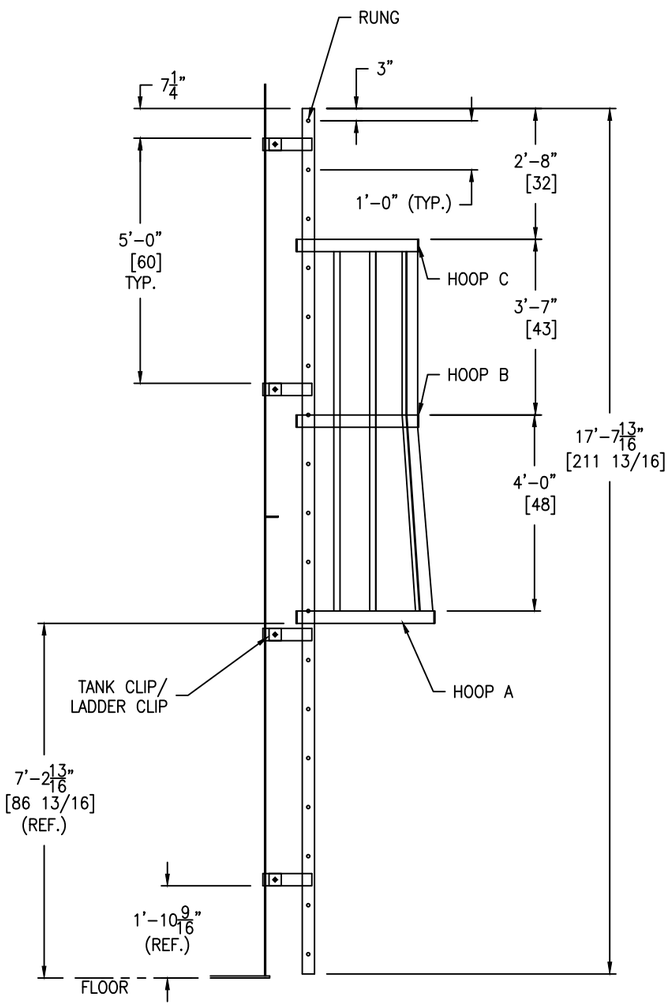

LOWER LADDER DETAIL

SCALE: 1/2" = 1'-0"

GM-73

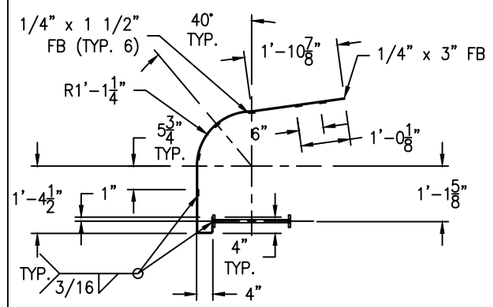

HOOP "C" DETAIL

(1 REQ'D) SCALE: 1/2" = 1'-0"

GM-73

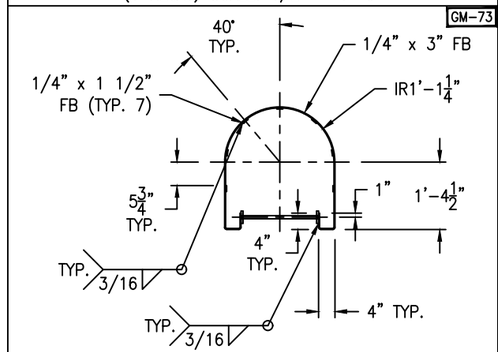

HOOP "B" DETAIL

(1 REQ'D) SCALE: 1/2" = 1'-0"

GM-73

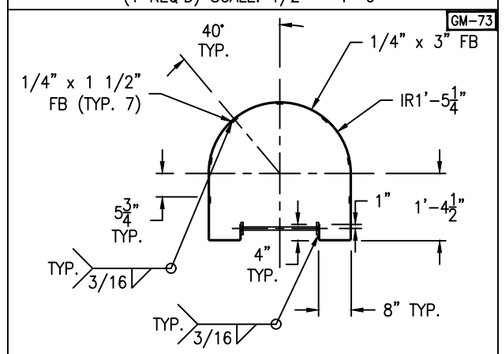

HOOP "A" DETAIL

(1 REQ'D) SCALE: 1/2" = 1'-0"

GM-73

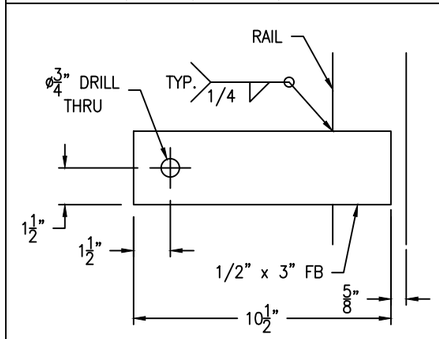

LADDER CLIP DETAIL

(8 REQ'D) SCALE: 3" = 1'-0"

GM-73

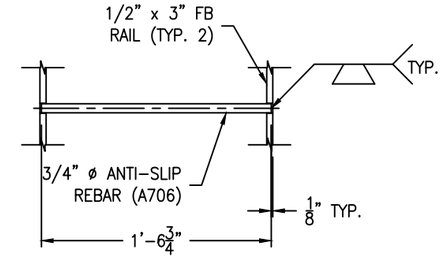

RUNG DETAIL

(18 REQ'D) SCALE: 1 1/2" = 1'-0"

FC-14

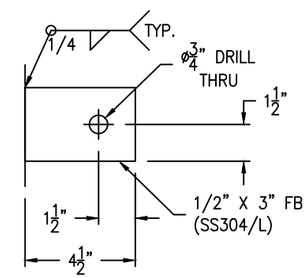

TANK CLIP DETAIL

(8 REQ'D) SCALE: 3" = 1'-0"

LADDER TO BE PAINTED SAFETY YELLOW

REV	D.BY	C.BY	DATE	DESCRIPTION
3	RS	AD	11/14/24	AS BUILT CERTIFIED
2	AD	RS	11/4/24	APPROVAL REV 2
1	RS	AD	10/21/24	APPROVAL REV 1
0	RS	AD	9/3/24	APPROVAL

⚠ REVISIONS

Savannah Tank & Equipment Corp.
1517 Telfair Road, Savannah, GA 31415
(912) 233-8902

DRAWN BY: RS
CHK'D BY: AD
APPROVED BY: NP
SCALE: 1/4" = 1'-0"

SYMS ENGINEERING
NMP STORAGE TANK
EQUIP. #TK-F502
CUST. PO #MCD010813KE01

DRAWING NO.: 048-24-7 SHT 7 OF 14 | REV. SET 3

LADDER CLIP BOLTING:
(8) 5/8-11 NC X 2" HH BOLT - SA193-B7 (ZINC PLATED)
(8) 5/8-11 NC HH NUT - SA194-2H (ZINC PLATED)

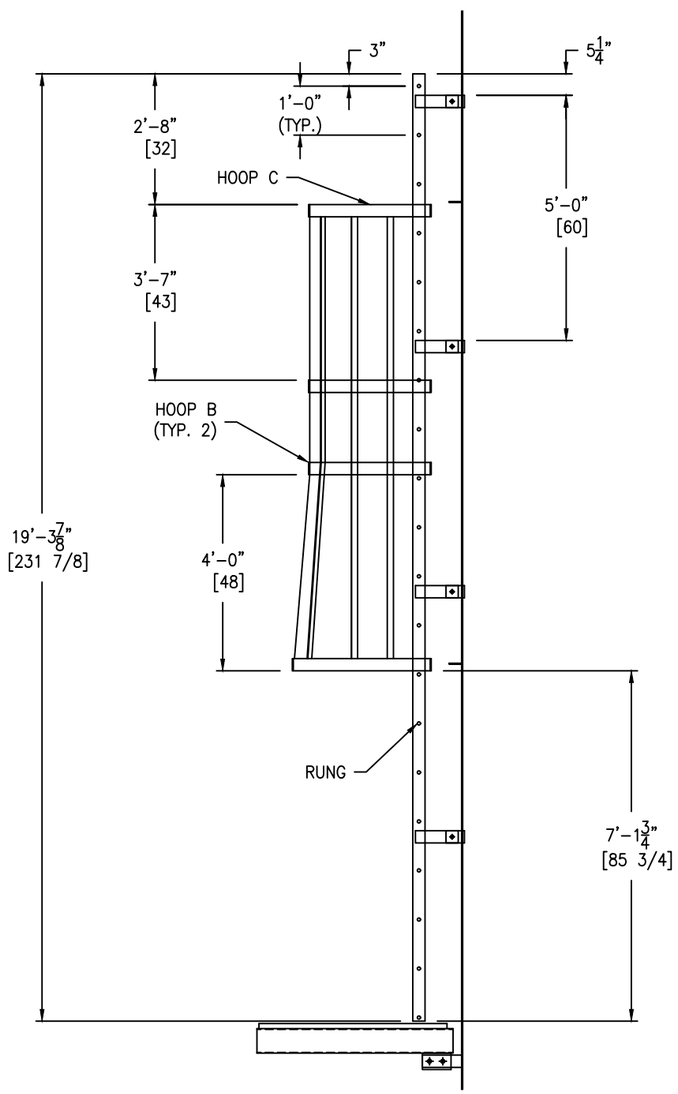

MIDDLE LADDER DETAIL

SCALE: 1/2" = 1'-0"

GM-73

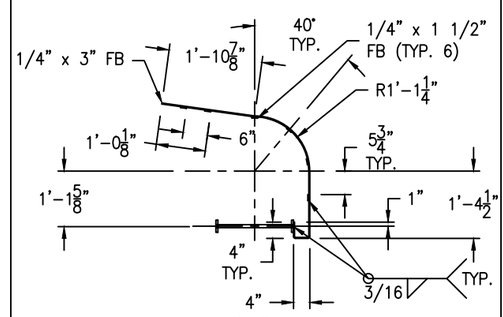

HOOP "C" DETAIL

(1 REQ'D) SCALE: 1/2" = 1'-0"

GM-73

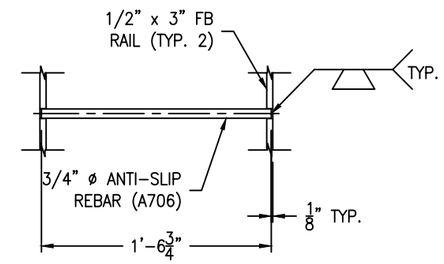

RUNG DETAIL

(20 REQ'D) SCALE: 1 1/2" = 1'-0"

GM-73

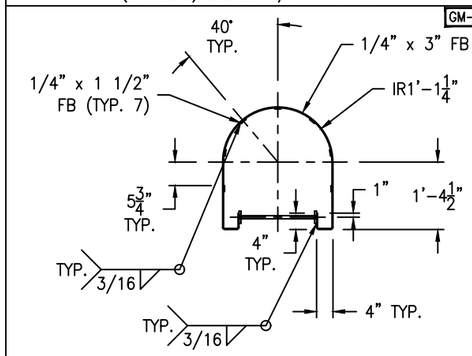

HOOP "B" DETAIL

(2 REQ'D) SCALE: 1/2" = 1'-0"

FC-14

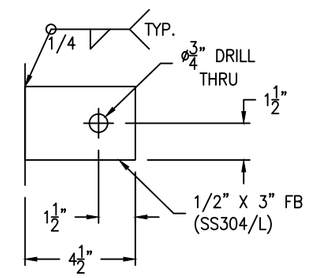

TANK CLIP DETAIL

(8 REQ'D) SCALE: 3" = 1'-0"

GM-73

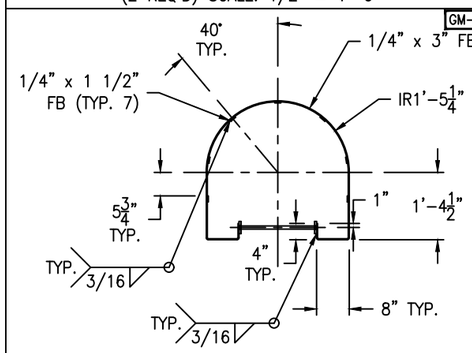

HOOP "A" DETAIL

(1 REQ'D) SCALE: 1/2" = 1'-0"

GM-73

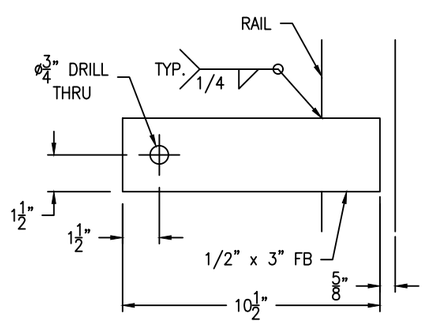

LADDER CLIP DETAIL

(8 REQ'D) SCALE: 3" = 1'-0"

LADDER TO BE PAINTED SAFETY YELLOW

REV	D.BY	C.BY	DATE	DESCRIPTION
				AS BUILT
3	RS	AD	11/14/24	CERTIFIED
2	AD	RS	11/4/24	APPROVAL REV 2
1	RS	AD	10/21/24	APPROVAL REV 1
0	RS	AD	9/3/24	APPROVAL

⚠ REVISIONS

Savannah Tank & Equipment Corp.
1517 Telfair Road, Savannah, GA 31415
(912) 233-8902

DRAWN BY: RS
CHK'D BY: AD
APPROVED BY: NP
SCALE: 1/4" = 1'-0"

SYMS ENGINEERING
NMP STORAGE TANK
EQUIP. #TK-F502
CUST. PO #MCD010813KE01

DRAWING NO.: 048-24-8 SHT 8 OF 14 REV. SET 3

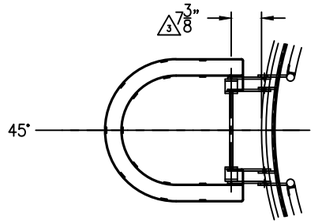

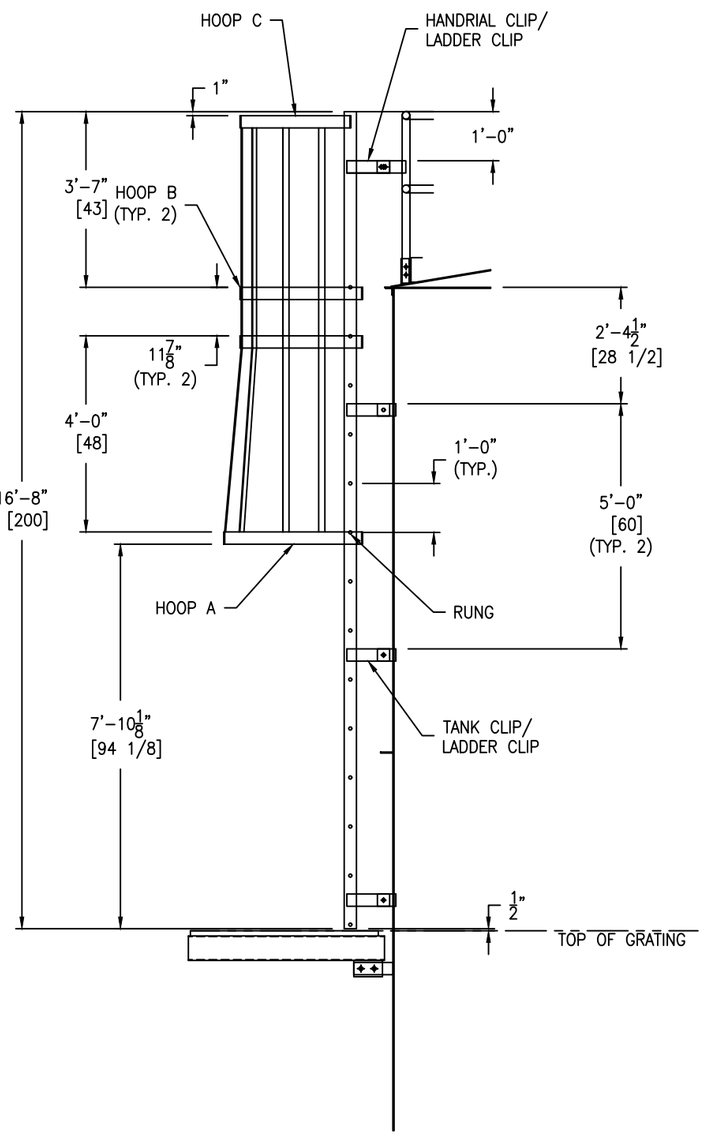

UPPER LADDER DETAIL

SCALE: 1/2" = 1'-0"

GM-73

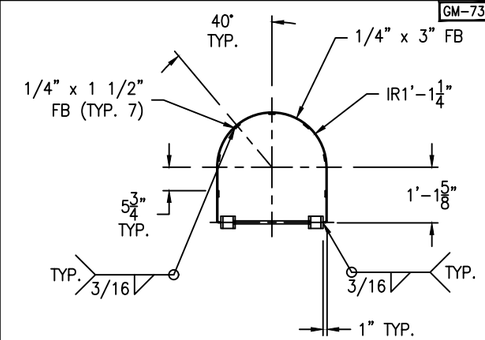

HOOP "C" DETAIL

(1 REQ'D) SCALE: 1/2" = 1'-0"

GM-73

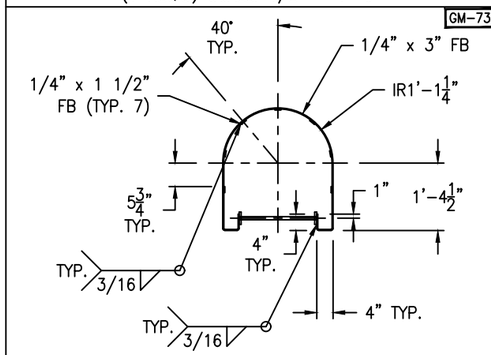

HOOP "B" DETAIL

(2 REQ'D) SCALE: 1/2" = 1'-0"

GM-73

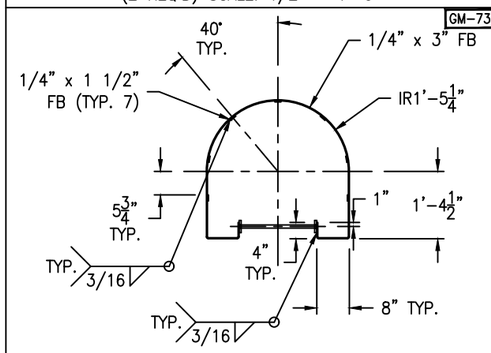

HOOP "A" DETAIL

(1 REQ'D) SCALE: 1/2" = 1'-0"

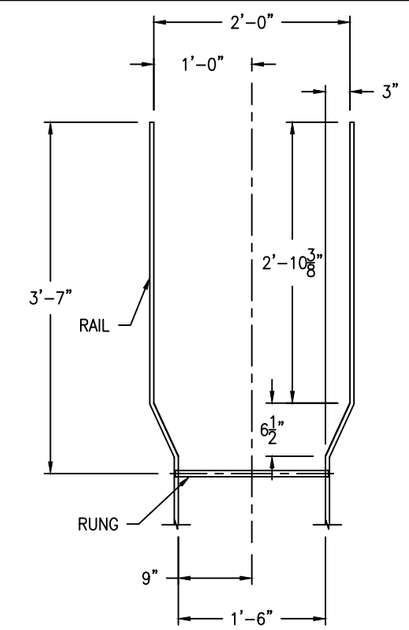

WALK-THRU DETAIL

SCALE: 1" = 1'-0"

GM-73

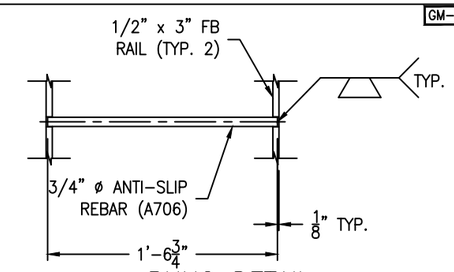

RUNG DETAIL

(14 REQ'D) SCALE: 1 1/2" = 1'-0"

GM-73

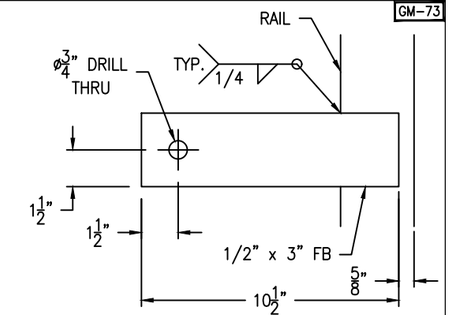

LADDER CLIP DETAIL

(8 REQ'D) SCALE: 3" = 1'-0"

FC-14

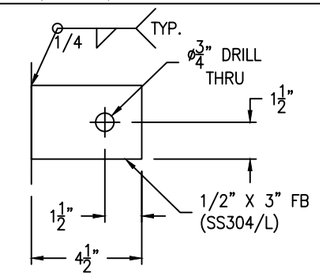

TANK CLIP DETAIL

(6 REQ'D) SCALE: 3" = 1'-0"

GM-73

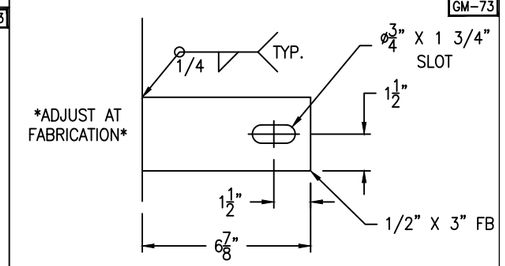

HANDRAIL CLIP DETAIL

(2 REQ'D) SCALE: 3" = 1'-0"

LADDER CLIP BOLTING:
(8) 5/8-11 NC X 2" HH BOLT - SA193-B7 (ZINC PLATED)
(8) 5/8-11 NC HH NUT - SA194-2H (ZINC PLATED)

LADDER TO BE PAINTED SAFETY YELLOW

REV	D.BY	C.BY	DATE	DESCRIPTION
				AS BUILT
3	RS	AD	11/14/24	CERTIFIED
2	AD	RS	11/4/24	APPROVAL REV 2
1	RS	AD	10/21/24	APPROVAL REV 1
0	RS	AD	9/3/24	APPROVAL

⚠ REVISIONS

Savannah Tank & Equipment Corp.
1517 Telfair Road, Savannah, GA 31415
(912) 233-8902

DRAWN BY: RS
CHK'D BY: AD
APPROVED BY: NP
SCALE: 1/4" = 1'-0"

SYMS ENGINEERING
NMP STORAGE TANK
EQUIP. #TK-F502
CUST. PO #MCD010813KE01

DRAWING NO.: 048-24-9 SHT 9 OF 14 REV. SET 3

FRAME SUPPORT BOLTING:
(24+24) 3/4-10 NC X 2" HH BOLT - SA193-B7 (ZINC PLATED)
(24+24) 3/4-10 NC HH NUT - SA194-2H (ZINC PLATED)

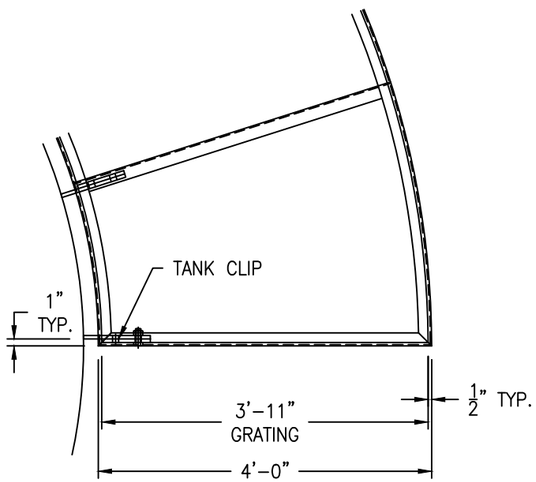

TYPICAL BRACE CLIP LAYOUT DETAIL

SCALE: 3/4" = 1'-0"

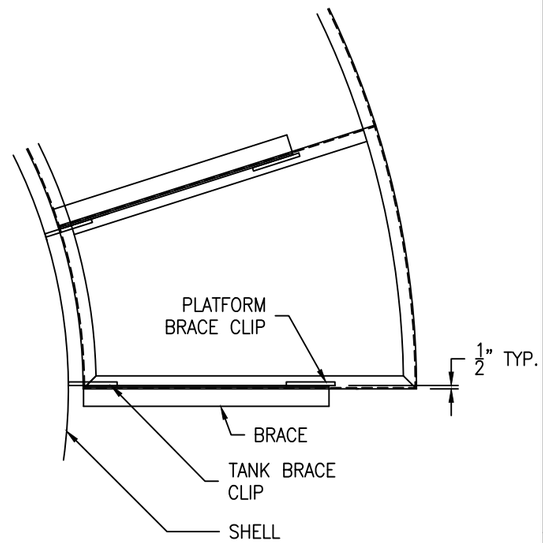

TYPICAL BRACE CLIP LAYOUT DETAIL

SCALE: 3/4" = 1'-0"

GM-73

FC-14

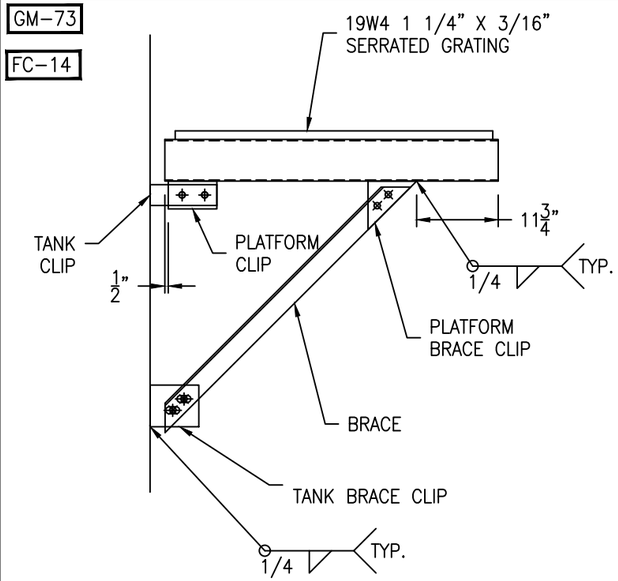

TYPICAL PLATFORM ELEVATION DETAIL

SCALE: 3/4" = 1'-0"

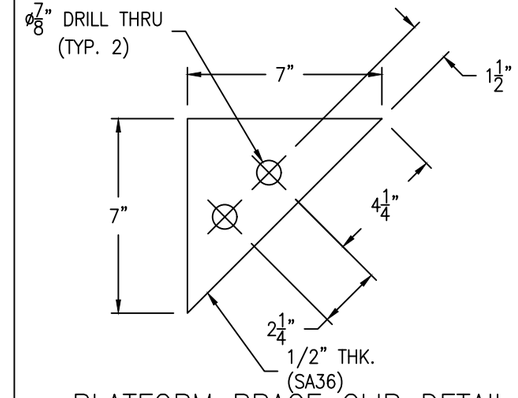

PLATFORM BRACE CLIP DETAIL

(4+4 REQ'D) SCALE: 3" = 1'-0"

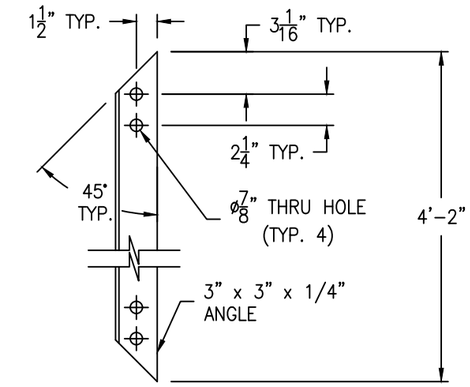

BRACE DETAIL

(4+4 REQ'D) SCALE: 1 1/2" = 1'-0"

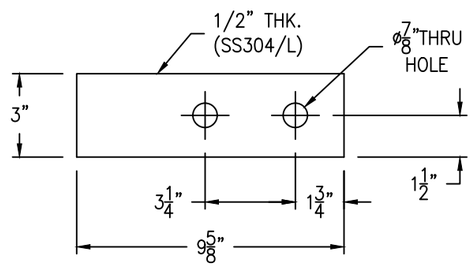

TANK CLIP DETAIL

(4+4 REQ'D) SCALE: 3" = 1'-0"

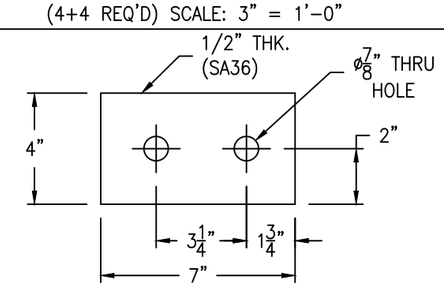

PLATFORM CLIP DETAIL

(4+4 REQ'D) SCALE: 3" = 1'-0"

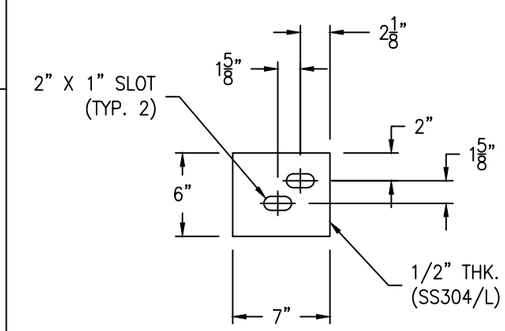

TANK BRACE CLIP DETAIL

(4+4 REQ'D) SCALE: 1 1/2" = 1'-0"

GM-73

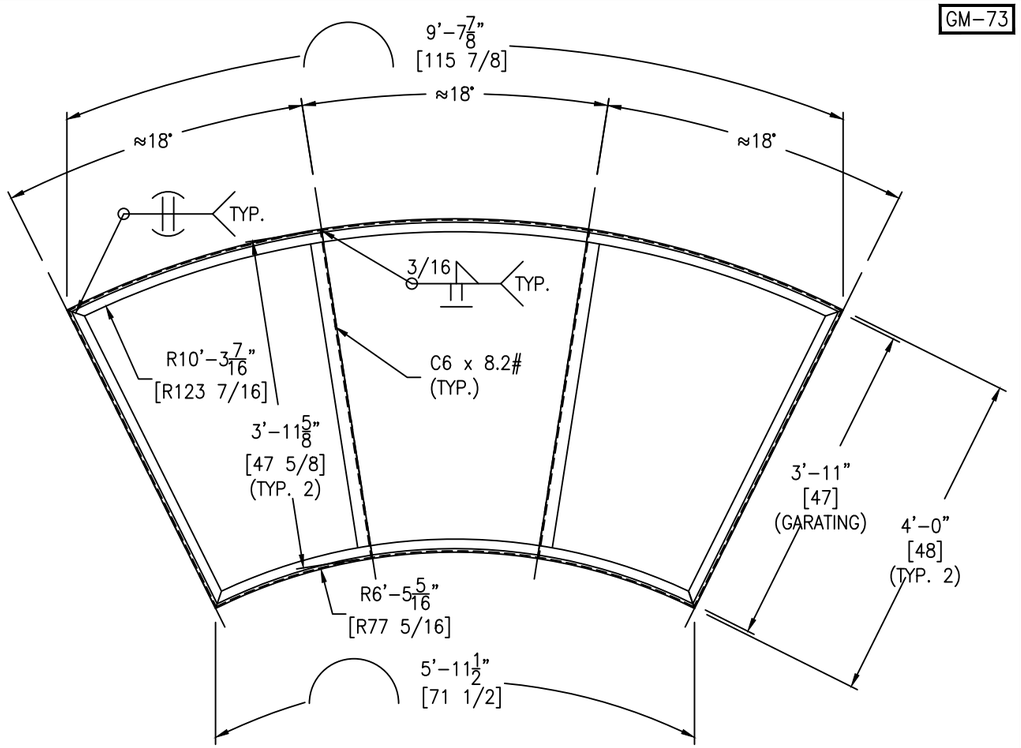

PLATFORM, FRAME& GRATING DETAIL

(1+1 REQ'D) SCALE: 3/4" = 1'-0"

BOTH PLATFORMS, BRACES & GRATINGS TO BE HOT DIPPED GALVANIZED

REV	D.BY	C.BY	DATE	DESCRIPTION
				AS BUILT
3	RS	AD	11/14/24	CERTIFIED
2	AD	RS	11/4/24	APPROVAL REV 2
1	RS	AD	10/21/24	APPROVAL REV 1
0	RS	AD	9/3/24	APPROVAL

1 REVISIONS

Savannah Tank & Equipment Corp.
1517 Telfair Road, Savannah, GA 31415
(912) 233-8902

DRAWN BY: RS
CHK'D BY: AD
APPROVED BY: NP
SCALE: 3/8" = 1'-0"

SYMS ENGINEERING
NMP STORAGE TANK
EQUIP. #TK-F502
CUST. PO #MCD010813KE01

DRAWING NO.: 048-24-10 SHT 10 OF 14 | REV. SET 3

HANDRAIL BOLTING:
(12) 1/2-13 NC X 3" HH BOLT - SA193-B7 (PLATED)
(12) 1/2-13 NC HH NUT - SA194-2H (PLATED)

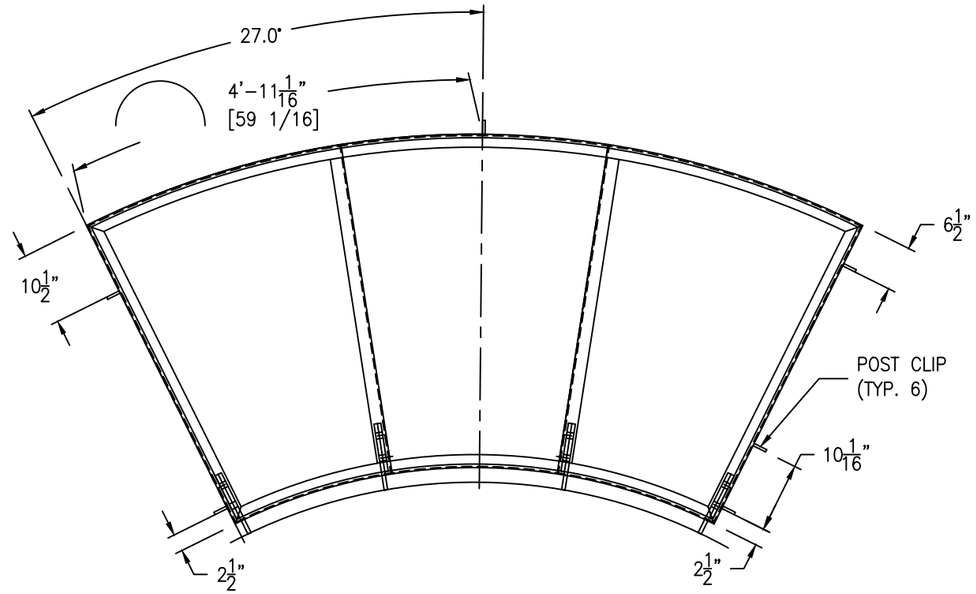

POST CLIP DETAIL

SCALE: 3/4" = 1'-0"

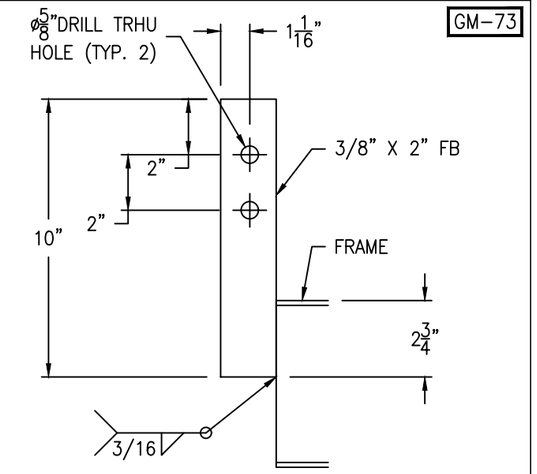

POST CLIP DETAIL

(6 REQ'D) SCALE: 3" = 1'-0"

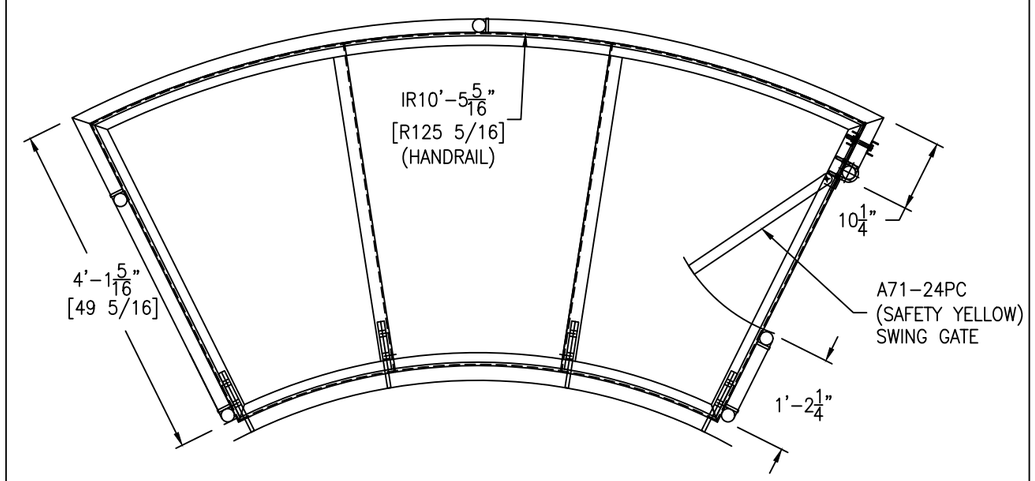

HANDRAIL (UPPER PLATFORM) DETAIL

SCALE: 3/4" = 1'-0"

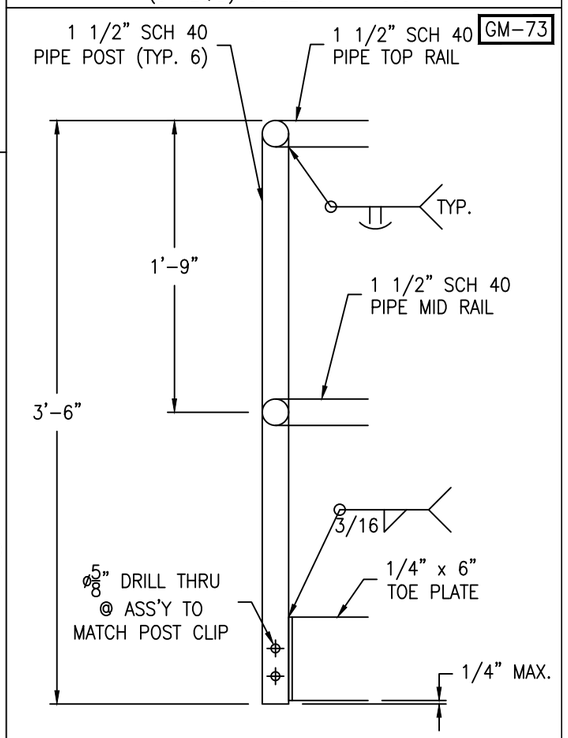

*NOTE: DRILL HOLES IN RAILS AND POSTS IF GALVANIZED.

HANDRAIL DETAIL

SCALE: 1 1/2" = 1'-0"

HANDRAIL TO BE PAINTED SAFETY YELLOW

REV	D.BY	C.BY	DATE	DESCRIPTION
				AS BUILT
3	RS	AD	11/14/24	CERTIFIED
2	AD	RS	11/4/24	APPROVAL REV 2
1	RS	AD	10/21/24	APPROVAL REV 1
0	RS	AD	9/3/24	APPROVAL

1 REVISIONS

Savannah Tank & Equipment Corp.
1517 Telfair Road, Savannah, GA 31415
(912) 233-8902

DRAWN BY: RS
CHK'D BY: AD
APPROVED BY: NP
SCALE: 3/8" = 1'-0"

SYMS ENGINEERING
NMP STORAGE TANK
EQUIP. #TK-F502
CUST. PO #MCD010813KE01

DRAWING NO.:048-24-11 SHT 11 OF 14 REV. SET 3

HANDRAIL BOLTING:
(12) 1/2-13 NC X 3" HH BOLT - SA193-B7 (PLATED)
(12) 1/2-13 NC HH NUT - SA194-2H (PLATED)

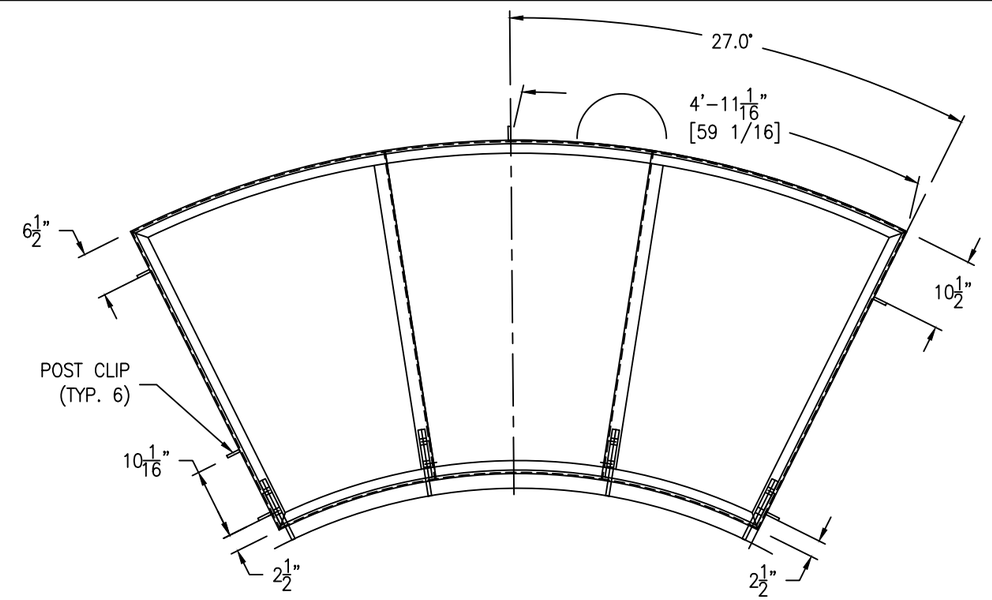

POST CLIP DETAIL

SCALE: 3/4" = 1'-0"

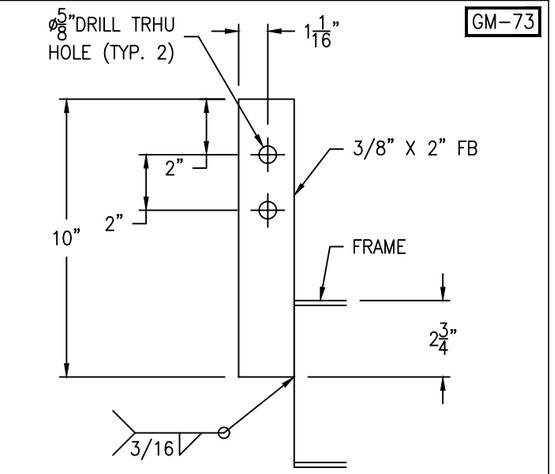

POST CLIP DETAIL

(6 REQ'D) SCALE: 3" = 1'-0"

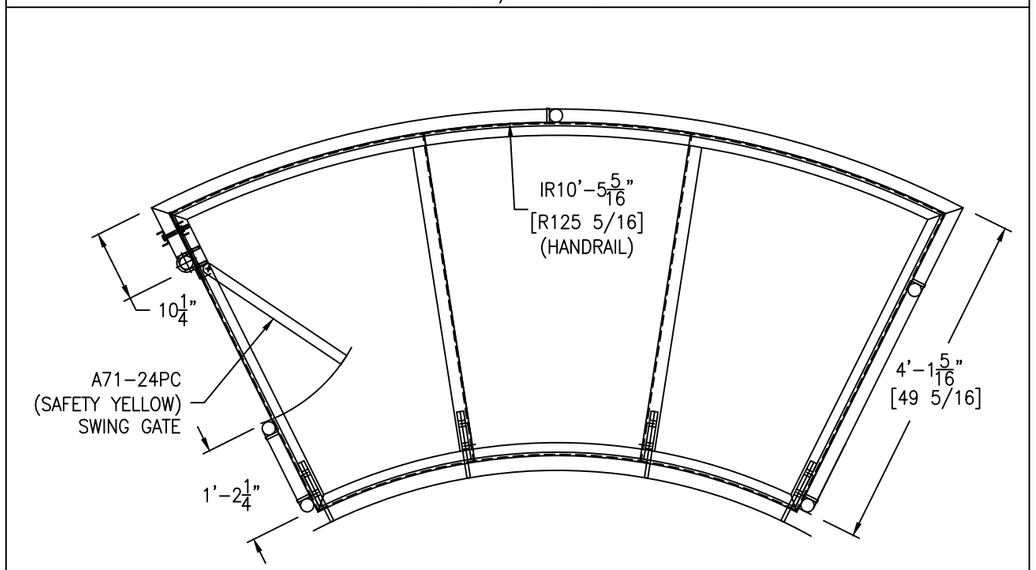

HANDRAIL (LOWER PLATFORM) DETAIL

SCALE: 3/4" = 1'-0"

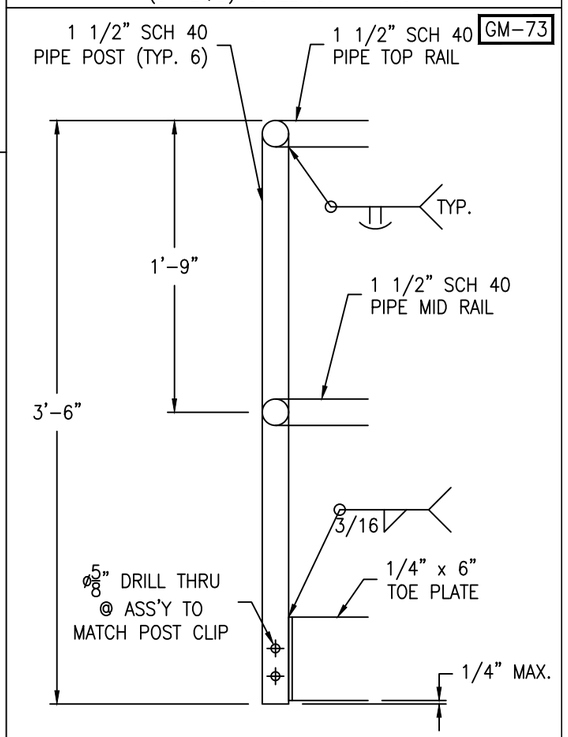

*NOTE: DRILL HOLES IN RAILS AND POSTS IF GALVANIZED.

HANDRAIL DETAIL

SCALE: 1 1/2" = 1'-0"

HANDRAIL TO BE PAINTED SAFETY YELLOW

REV	D.BY	C.BY	DATE	DESCRIPTION
				AS BUILT
3	RS	AD	11/14/24	CERTIFIED
2	AD	RS	11/4/24	APPROVAL REV 2
1	RS	AD	10/21/24	APPROVAL REV 1
0	RS	AD	9/3/24	APPROVAL

⚠1 REVISIONS

Savannah Tank & Equipment Corp.
1517 Telfair Road, Savannah, GA 31415
(912) 233-8902

DRAWN BY: RS
CHK'D BY: AD
APPROVED BY: NP
SCALE: 3/8" = 1'-0"

SYMS ENGINEERING
NMP STORAGE TANK
EQUIP. #TK-F502
CUST. PO #MCD010813KE01

DRAWING NO.:048-24-12 SHT 12 OF 14 REV. SET 3

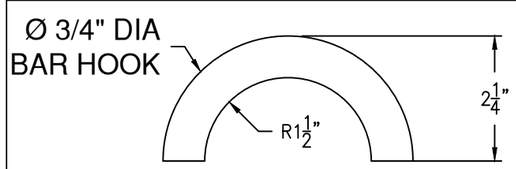

HOOK DETAIL

(1 REQ'D) SCALE: 6" = 1'-0"

FC-14

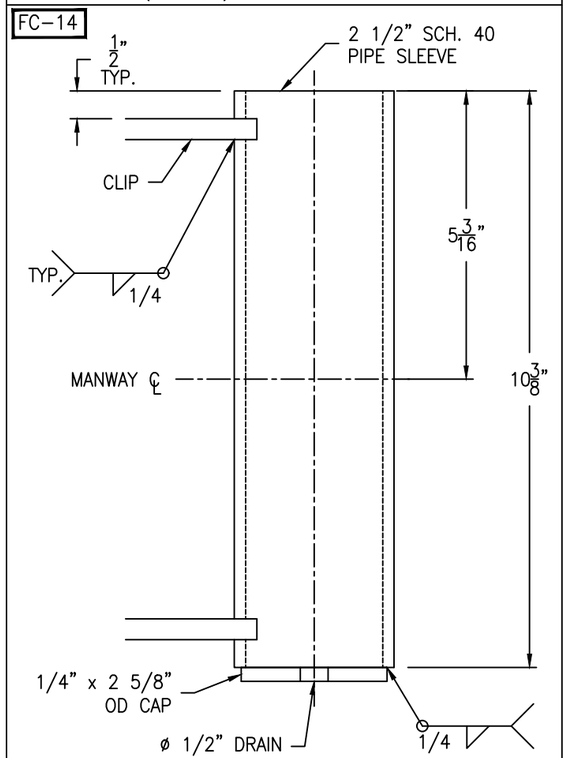

SLEEVE DETAIL

(1 REQ'D) SCALE: 6" = 1'-0"

FC-14

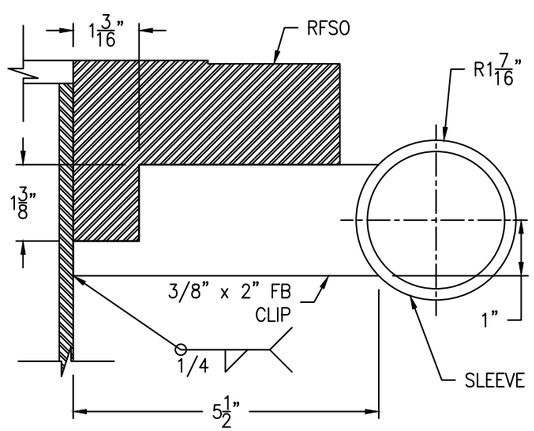

CLIP DETAIL

(2 REQ'D) SCALE: 6" = 1'-0"

FC-14

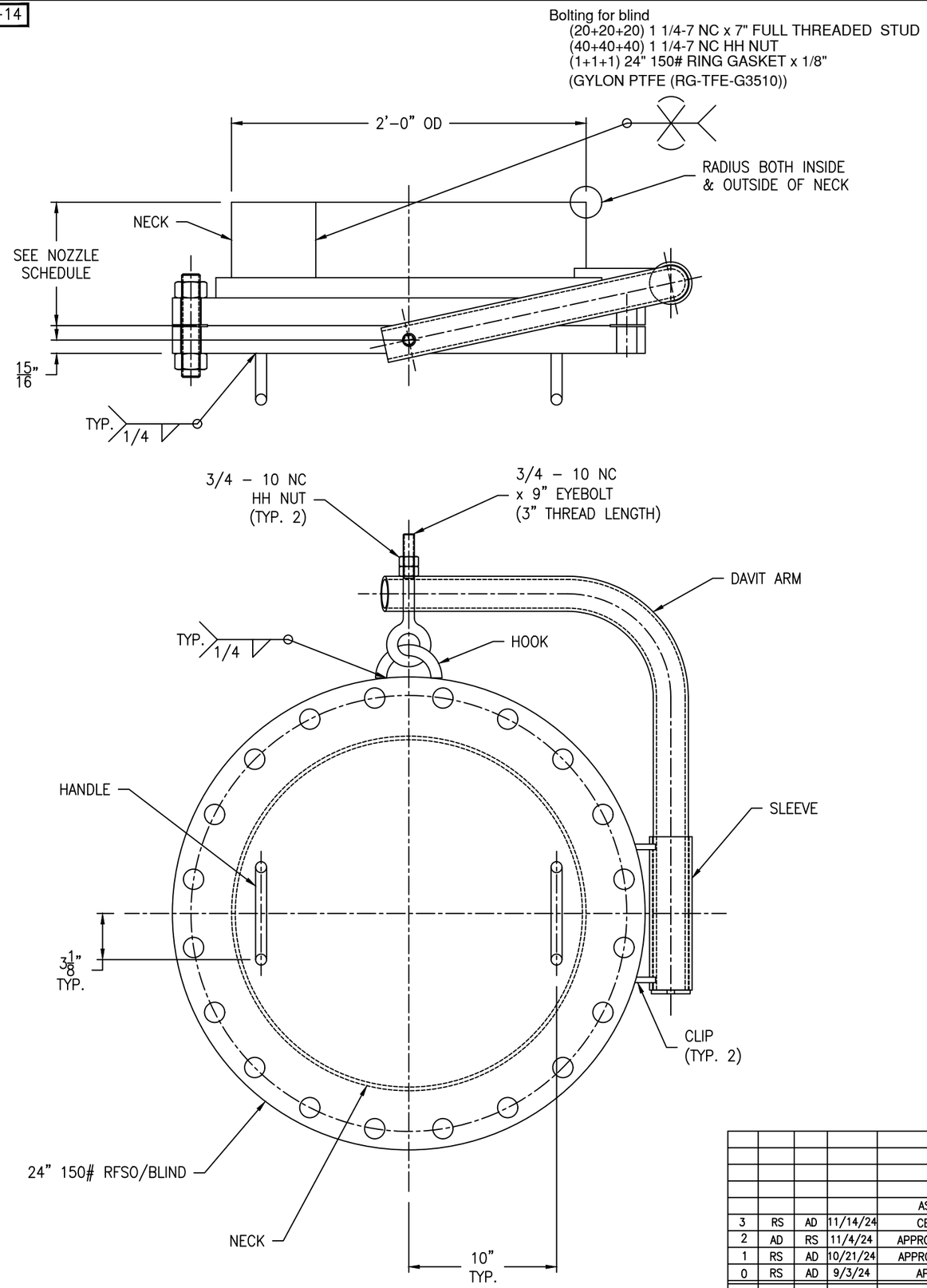

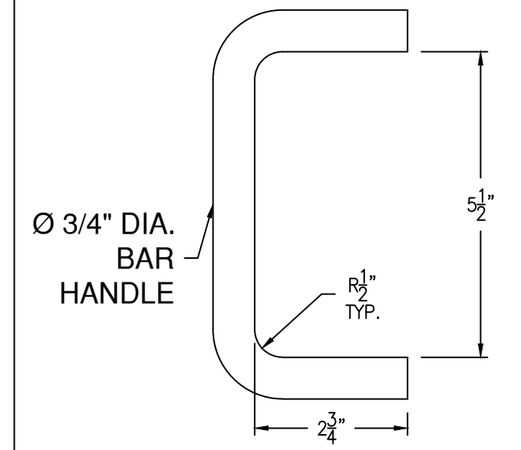

HANDLE DETAIL

(2 REQ'D) SCALE: 6" = 1'-0"

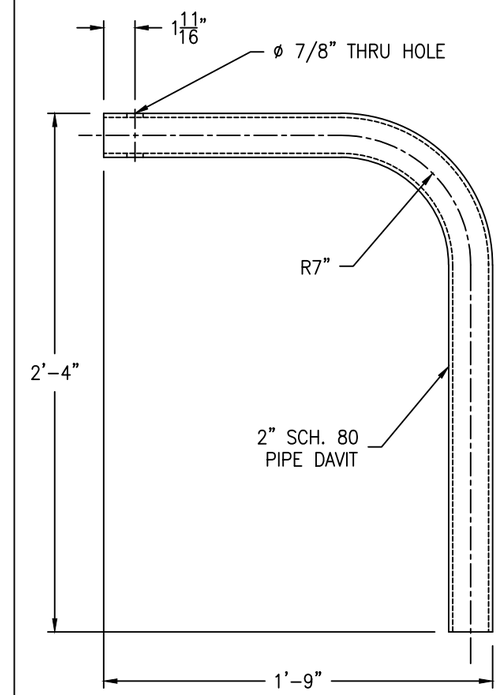

DAVIT ARM DETAIL

(1 REQ'D) SCALE: 2" = 1'-0"

REV	D.BY	C.BY	DATE	DESCRIPTION
				AS BUILT
3	RS	AD	11/14/24	CERTIFIED
2	AD	RS	11/4/24	APPROVAL REV 2
1	RS	AD	10/21/24	APPROVAL REV 1
0	RS	AD	9/3/24	APPROVAL

⚠ REVISIONS

Savannah Tank & Equipment Corp.
1517 Telfair Road, Savannah, GA 31415
(912) 233-8902

DRAWN BY: RS
CHK'D BY: AD
APPROVED BY: NP
SCALE: 2" = 1'-0"

SYMS ENGINEERING
NMP STORAGE TANK
EQUIP. #TK-F502
CUST. PO #MCD010813KE01

DRAWING NO.:048-24-13 SHT 13 OF 14 | REV. SET 3

FC-14

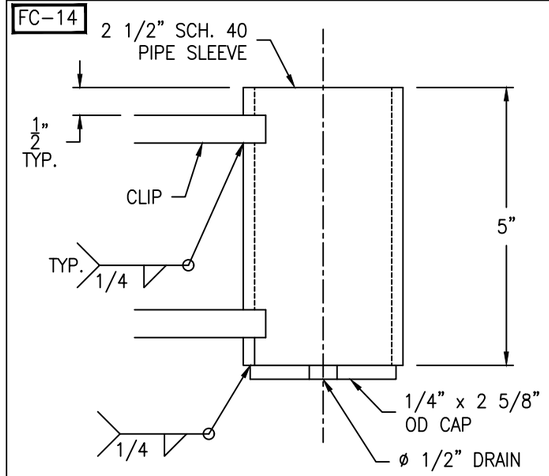

SLEEVE DETAIL

(1 REQ'D) SCALE: 6" = 1'-0"

FC-14

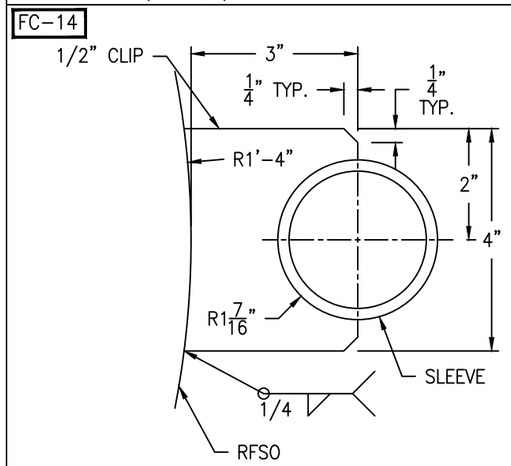

UPPER CLIP DETAIL

(1 REQ'D) SCALE: 6" = 1'-0"

FC-14

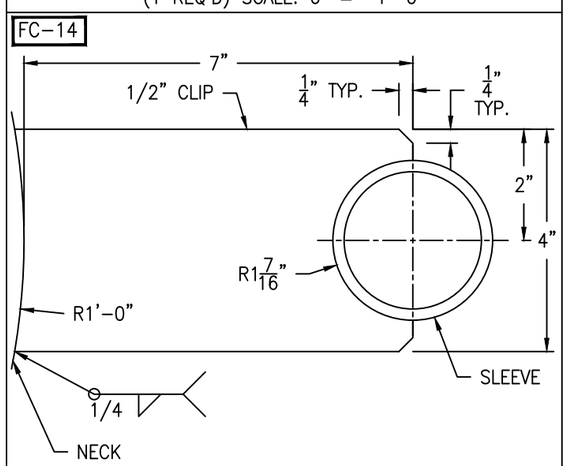

LOWER CLIP DETAIL

(1 REQ'D) SCALE: 6" = 1'-0"

FC-14

Bolting for blind
(20+20+20) 1 1/4-7 NC x 7" FULL THREADED STUD
(40+40+40) 1 1/4-7 NC HH NUT
(1+1+1) 24" 150# RING GASKET x 1/8"
(GYLON PTFE (RG-TFE-G3510))

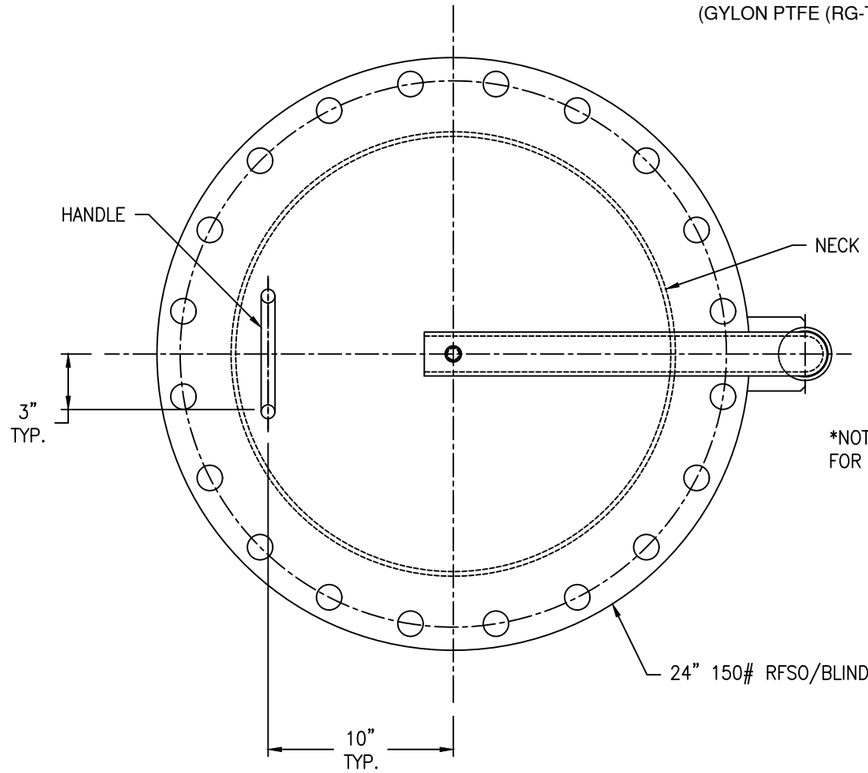

*NOTE: SEE VESSEL ORIENTATION FOR DAVIT LOCATION

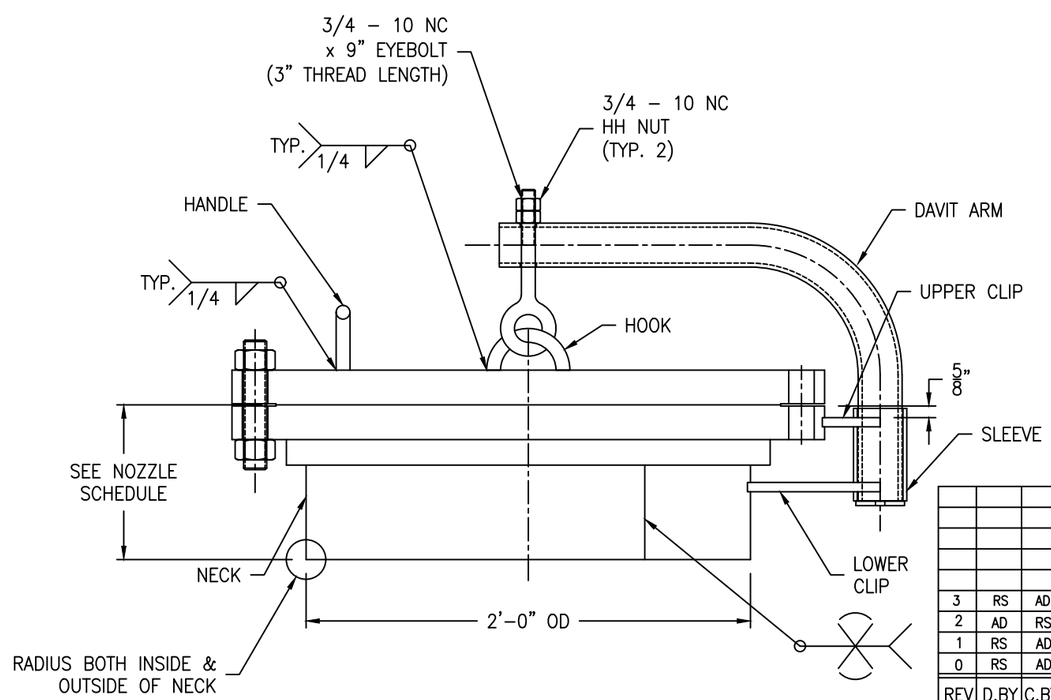

Ø 3/4" DIA.
BAR
HANDLE

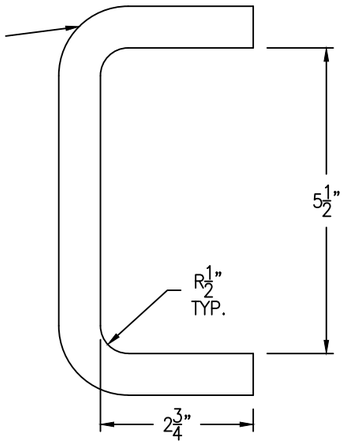

HANDLE DETAIL

(1 REQ'D) SCALE: 6" = 1'-0"

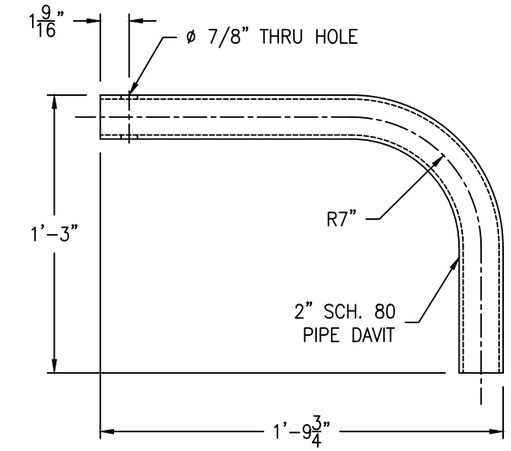

DAVIT ARM DETAIL

(1 REQ'D) SCALE: 2" = 1'-0"

Ø 3/4" DIA
BAR HOOK

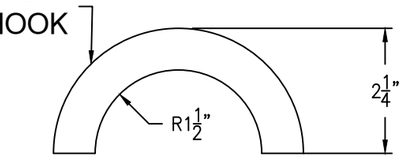

HOOK DETAIL

(1 REQ'D) SCALE: 6" = 1'-0"

REV	D.BY	C.BY	DATE	DESCRIPTION
				AS BUILT
3	RS	AD	11/14/24	CERTIFIED
2	AD	RS	11/4/24	APPROVAL REV 2
1	RS	AD	10/21/24	APPROVAL REV 1
0	RS	AD	9/3/24	APPROVAL

⚠ REVISIONS

Savannah Tank & Equipment Corp.
1517 Telfair Road, Savannah, GA 31415
(912) 233-8902

DRAWN BY: RS
CHK'D BY: AD
APPROVED BY: NP
SCALE: 2" = 1'-0"

SYMS ENGINEERING
NMP STORAGE TANK
EQUIP. #TK-F502
CUST. PO #MCD010813KE01

DRAWING NO.: 048-24-14 SHT 14 OF 14 | REV. SET 3